FS-1040
FS-1060DN

SERVICE MANUAL

Published in March 2012
842M3110
2M3SM060
First Edition

CAUTION

RISK OF EXPLOSION IF BATTERY IS REPLACED BY AN INCORRECT TYPE. DISPOSE OF USED BATTERIES ACCORDING TO THE INSTRUCTIONS.

It may be illegal to dispose of this battery into the municipal waste stream. Check with your local solid waste officials for details in your area for proper disposal.

ATTENTION

IL Y A UN RISQUE D'EXPLOSION SI LA BATTERIE EST REMPLACEE PAR UN MODELE DE TYPE INCORRECT. METTRE AU REBUT LES BATTERIES UTILISEES SELON LES INSTRUCTIONS DONNEES.

Il peut être illégal de jeter les batteries dans des eaux d'égout municipales. Vérifiez avec les fonctionnaires municipaux de votre région pour les détails concernant des déchets solides et une mise au rebut appropriée.

Notation of products in the manual

For the purpose of this service manual, products are identified by print speed at A4 modes.

FS-1040: 20/21 ppm model
FS-1060DN: 25/26 ppm model

Revision history

Revision	Date	Replaced pages	Remarks

This page is intentionally left blank.

Safety precautions

This booklet provides safety warnings and precautions for our service personnel to ensure the safety of their customers, their machines as well as themselves during maintenance activities. Service personnel are advised to read this booklet carefully to familiarize themselves with the warnings and precautions described here before engaging in maintenance activities.

Safety warnings and precautions

Various symbols are used to protect our service personnel and customers from physical danger and to prevent damage to their property. These symbols are described below:

⚠**DANGER:** High risk of serious bodily injury or death may result from insufficient attention to or incorrect compliance with warning messages using this symbol.

⚠**WARNING:** Serious bodily injury or death may result from insufficient attention to or incorrect compliance with warning messages using this symbol.

⚠**CAUTION:** Bodily injury or damage to property may result from insufficient attention to or incorrect compliance with warning messages using this symbol.

Symbols

The triangle (△) symbol indicates a warning including danger and caution. The specific point of attention is shown inside the symbol.

General warning. Warning of risk of electric shock.

Warning of high temperature.

⃠ indicates a prohibited action. The specific prohibition is shown inside the symbol.

General prohibited action. Disassembly prohibited.

● indicates that action is required. The specific action required is shown inside the symbol.

General action required. Remove the power plug from the wall outlet.

Always ground the copier.

1. Installation Precautions

WARNING

- Do not use a power supply with a voltage other than that specified. Avoid multiple connections to one outlet: they may cause fire or electric shock. When using an extension cable, always check that it is adequate for the rated current. .....
- Connect the ground wire to a suitable grounding point. Not grounding the copier may cause fire or electric shock. Connecting the earth wire to an object not approved for the purpose may cause explosion or electric shock. Never connect the ground cable to any of the following: gas pipes, lightning rods, ground cables for telephone lines and water pipes or faucets not approved by the proper authorities. .....

CAUTION:

- Do not place the copier on an infirm or angled surface: the copier may tip over, causing injury. .....
- Do not install the copier in a humid or dusty place. This may cause fire or electric shock. .....
- Do not install the copier near a radiator, heater, other heat source or near flammable material. This may cause fire. .....
- Allow sufficient space around the copier to allow the ventilation grills to keep the machine as cool as possible. Insufficient ventilation may cause heat buildup and poor copying performance. .....
- Always handle the machine by the correct locations when moving it. .....
- Always use anti-toppling and locking devices on copiers so equipped. Failure to do this may cause the copier to move unexpectedly or topple, leading to injury. .....
- Avoid inhaling toner or developer excessively. Protect the eyes. If toner or developer is accidentally ingested, drink a lot of water to dilute it in the stomach and obtain medical attention immediately. If it gets into the eyes, rinse immediately with copious amounts of water and obtain medical attention. .....
- Advice customers that they must always follow the safety warnings and precautions in the copier's instruction handbook. .....

2. Precautions for Maintenance

WARNING

- Always remove the power plug from the wall outlet before starting machine disassembly. .....
- Always follow the procedures for maintenance described in the service manual and other related brochures. .....
- Under no circumstances attempt to bypass or disable safety features including safety mechanisms and protective circuits. .....
- Always use parts having the correct specifications. .....
- Always use the thermostat or thermal fuse specified in the service manual or other related brochure when replacing them. Using a piece of wire, for example, could lead to fire or other serious accident. .....
- When the service manual or other serious brochure specifies a distance or gap for installation of a part, always use the correct scale and measure carefully. .....
- Always check that the copier is correctly connected to an outlet with a ground connection. .....
- Check that the power cable covering is free of damage. Check that the power plug is dust-free. If it is dirty, clean it to remove the risk of fire or electric shock. .....
- Never attempt to disassemble the optical unit in machines using lasers. Leaking laser light may damage eyesight. .....
- Handle the charger sections with care. They are charged to high potentials and may cause electric shock if handled improperly. .....

CAUTION

- Wear safe clothing. If wearing loose clothing or accessories such as ties, make sure they are safely secured so they will not be caught in rotating sections. .....
- Use utmost caution when working on a powered machine. Keep away from chains and belts. .....
- Handle the fixing section with care to avoid burns as it can be extremely hot. .....
- Check that the fixing unit thermistor, heat and press rollers are clean. Dirt on them can cause abnormally high temperatures. .....

- Do not remove the ozone filter, if any, from the copier except for routine replacement. .....
- Do not pull on the AC power cord or connector wires on high-voltage components when removing them; always hold the plug itself. .....
- Do not route the power cable where it may be stood on or trapped. If necessary, protect it with a cable cover or other appropriate item. .....
- Treat the ends of the wire carefully when installing a new charger wire to avoid electric leaks. .....
- Remove toner completely from electronic components. .....
- Run wire harnesses carefully so that wires will not be trapped or damaged. .....
- After maintenance, always check that all the parts, screws, connectors and wires that were removed, have been refitted correctly. Special attention should be paid to any forgotten connector, trapped wire and missing screws. .....
- Check that all the caution labels that should be present on the machine according to the instruction handbook are clean and not peeling. Replace with new ones if necessary. .....
- Handle greases and solvents with care by following the instructions below: .....
  · Use only a small amount of solvent at a time, being careful not to spill. Wipe spills off completely.
  · Ventilate the room well while using grease or solvents.
  · Allow applied solvents to evaporate completely before refitting the covers or turning the power switch on.
  · Always wash hands afterwards.
- Never dispose of toner or toner bottles in fire. Toner may cause sparks when exposed directly to fire in a furnace, etc. .....
- Should smoke be seen coming from the copier, remove the power plug from the wall outlet immediately. .....

3. Miscellaneous

WARNING

- Never attempt to heat the drum or expose it to any organic solvents such as alcohol, other than the specified refiner; it may generate toxic gas. .....
- Keep the machine away from flammable liquids, gases, and aerosols. A fire or an electric shock might occur. .....

This page is intentionally left blank.

CONTENTS

1-1 Specifications

1-1-1 Specifications 1-1-1
1-1-2 Parts names 1-1-3
(1) Machine 1-1-3
(2) Operation panel 1-1-4
1-1-3 Machine cross section 1-1-5
(1) 20/21 ppm Model 1-1-5
(2) 25/26 ppm Model 1-1-6

1-2 Installation

1-2-1 Installation environment 1-2-1
1-2-2 Unpacking and installation 1-2-2
(1) Installation procedure 1-2-2

1-3 Maintenance Mode

1-3-1 Maintenance mode 1-3-1
(1) Executing a maintenance items 1-3-1
1-3-2 Maintenance menu 1-3-11
(1) Setting Item 1-3-11
(2) Service package 1-3-12

1-4 Troubleshooting

1-4-1 Paper misfeed detection 1-4-1
(1) Paper misfeed indication 1-4-1
(2) Paper misfeed detection condition 1-4-2
1-4-2 Self-diagnostic function 1-4-4
(1) Self-diagnostic function 1-4-4
(2) Self diagnostic codes indication 1-4-4
(3) Self diagnostic codes 1-4-6
1-4-3 Image formation problems 1-4-8
(1) No image appears (entirely white). 1-4-9
(2) No image appears (entirely black). 1-4-9
(3) Part of image is missing. 1-4-10
(4) Gray background. 1-4-10
(5) White streaks are printed vertically. 1-4-11
(6) Black streaks are printed vertically. 1-4-11
(7) White or black streaks are printed horizontally. 1-4-11
(8) Spots are printed.Printing incomplete or out of position 1-4-12
(9) Printing incomplete or out of position 1-4-12
(10) Paper is wrinkled. 1-4-12
(11) Offset occurs. 1-4-13
(12) Fusing is loose. 1-4-13
(13) Faint or blurred printing 1-4-13
(14) Dirt on the top edge or back of the paper. 1-4-14
(15) Spots in the printed objects. 1-4-14
1-4-4 Electric problems 1-4-15
1-4-5 Mechanical problems 1-4-17
1-4-6 Error Messages 1-4-18

1-5 Assembly and disassembly

1-5-1 Precautions for assembly and disassembly 1-5-1
(1) Precautions 1-5-1
(2) Drum 1-5-1
(3) Toner 1-5-1
(4) How to tell a genuine Kyocera Mita toner container 1-5-2
1-5-2 Outer covers 1-5-3
(1) Detaching and refitting the top cover 1-5-3
(2) Detaching and refitting the Right cover 1-5-4
(3) Detaching and refitting the Left cover 1-5-5
1-5-3 Fuser section 1-5-6
(1) Detaching and refitting the fuser unit 1-5-6
1-5-4 PWBs 1-5-7
(1) Detaching and refitting the main PWB,high voltage PWB and power source PWB 1-5-7
(2) Detaching and refitting the operation panel PWB 1-5-11
1-5-5 Others 1-5-12
(1) Detaching and refitting the laser scanner unit 1-5-12
(2) Detaching and refitting the Main motor unit 1-5-14
(3) Direction of installing the principal fan motor 1-5-20

2-1 Mechanical Construction

2-1-1 Paper feed/conveying section 2-1-1
(1) Cassette paper feed /paper conveying section 2-1-1
(2) Manual feed section(25/26 ppm model only) 2-1-2
2-1-2 Drum section 2-1-4
2-1-3 Developer section 2-1-5
2-1-4 Optical section 2-1-6
(1) Laser scanner section 2-1-6
2-1-5 Transfer/Separation section 2-1-9
2-1-6 Fuser section 2-1-10
2-1-7 Duplex conveying/Eject section 2-1-12

2-2 Electrical Parts Layout

2-2-1 Electrical parts layout 2-2-1
(1) PWBs 2-2-1
(2) Switches and sensors 2-2-3
(3) Others 2-2-4

2-3 Operation of the PWBs

2-3-1 Main PWB 2-3-1
2-3-2 Relay PWB PWB 2-3-4
2-3-3 Power source PWB 2-3-6
2-3-4 Operation panel PWB 2-3-8

2-4 Appendixes

2-4-1 Maintenance kits 2-4-1
(1) Maintenance kits 2-4-1
2-4-2 Procedure for replacing Maintenance kit 2-4-2
(1) Preparation 2-4-2
(2) Detaching the Drum unit 2-4-4
(3) Detaching the developer unit 2-4-4
(4) Detaching the toner disposal box 2-4-5
(5) Detaching and refitting the paper feed pulley and lower paper feed guide 2-4-5
(6) Refitting the toner disposal box 2-4-10
(7) Refitting the developer unit 2-4-11
(8) Refitting the drum unit 2-4-12
(9) Detaching and refitting the transfer roller 2-4-13
(10) Notice after replacing maintenance kit 2-4-14
(11) Procedure for only replacing Drum unit 2-4-15
(12) Procedure for only replacing Developer unit 2-4-15
2-4-3 Cleaning the Printer 2-4-16
2-4-4 Appendixes 2-4-17
(1) Repetitive defects gauge 2-4-17
(2) Wiring diagram 2-4-18

This page is intentionally left blank.

1-1-1 Specifications

Machine

Item		Specifications	
		20/21 ppm	**25/26 ppm**
Type		Desktop	
Printing method		Electrophotography, laser scan	
Paper weight	**Cassette**	60 to 220 g/m²	
	Manual feed tray*	-	60 to 220 g/m²
Paper type	**Cassette/ Manual feed tray***	Plain, Preprinted, Labels, Bond, Recycled, Vellum, Rough, Letterhead, Color, Prepunched, Envelope, Cardstock, Thick paper, High Quality, Custom 1 to 8	
Paper size	**Cassette**	A4, JIS/ISO B5, A5, Folio, Legal, Letter, Oficio II (215.9 × 330.2 mm, 8-1/2 × 13 inches), Mexican Oficio (216 × 340 mm), Statement, Executive, A6, Envelope Monarch, Envelope #10, Envelope #9, Envelope #6-3/4, Envelope C5, Envelope DL, 16K, Custom (105 × 148 to 216 × 356 mm (4-1/8 × 5-13/16 to 8-1/2 × 14 inches)	
	Manual feed tray*	-	A4, JIS/ISO B5, A5, Folio, Legal, Letter, Oficio II (215.9 × 330.2 mm, 8-1/2 × 13 inches), Mexican Oficio (216 × 340 mm), Statement, Executive, A6, Envelope Monarch, Envelope #10, Envelope #9, Envelope #6-3/4, Envelope C5, Envelope DL, 16K, Custom (105 × 148 to 216 × 356 mm (4-1/8 × 5-13/16 to 8-1/2 × 14 inches)
Printing speed	**A4**	20 sheets/min	25 sheets/min
	Letter	21 sheets/min	26 sheets/min
	Legal	12 sheets/min	15 sheets/min
	B5	12 sheets/min	15 sheets/min
	A5/ StatementR	12 sheets/min	15 sheets/min
	A6	12 sheets/min	15 sheets/min
First print time (A4, feed from cassette)		8.5 s or less	7.5 s or less
Warm-up time (22 °C/71.6 °F, 60% RH)	**Power on**	14 s or less	16 s or less
	Sleep	12 s or less	14 s or less
Paper capacity	**Cassette**	250 sheets (80 g/m²)	
	Manual feed tray*	-	1 sheets

Item		Specifications	
		20/21 ppm	25/26 ppm
Output tray capacity	Standard paper	150 sheets (80 g/m²)	
	Special paper	-	1 sheets
Continuous copying		1 to 999 sheets	
Photoconductor		OPC drum (drum diameter 24 mm)	
Image write system		Semiconductor laser (1 beam)	
Charging system		Charger roller	
Developing system		Mono component dry developing method Toner replenishing: Automatic from the toner container	
Transfer system		Transfer roller	
Separation system		Small diameter separation, discharger brush	
Cleaning system		Counter blade	
Charge erasing system		Exposure by eraser lamp (LED)	
Fusing system		Heat roller system Abnormally high temperature protection devices: thermostat	
CPU		ARM926EJ 390MHz	
memory		32 MB (Maxmum 32 MB)	
Interface		USB Interface connector: 1 (USB Hi-Speed)	USB Interface connector: 1 (USB Hi-Speed) Network interface: 1 (10 BASE-T/ 100 BASE-TX)
Resolution		600 × 600 dpi	
Page Description Language		KPSL	
Operating environment	Temperature	10 to 32.5 °C/50 to 90.5 °F	
	Humidity	15 to 80% RH	
	Altitude	3,500 m/11,482.8 ft or less High altitude mode is available for regular operation at less than 1500m or 1500 – 3500m.	
	Brightness	1,500 lux or less	
Dimensions (W × D × H)	machine only	358 × 262 × 241 mm 14 1/8 × 10 5/16 × 9 1/2”	358 × 276 × 241 mm 14 1/8 × 10 7/8 × 9 1/2”
Space required (W × D)		358 × 645 mm (using paper feed tray) 14 1/8 × 13/16”	358 × 630 mm) (using paper feed tray) 14 1/8 × 3/8”
Weight		6.3 kg/13.86 lb	6.7 kg/14.74 lb
Power source		120 V Specification Model:120 V (60 Hz, 5.4 A) 230 V Specification Model: 220 to 240 V (50 Hz/60 Hz, 2.8 A)	

*:The Manual Feed tray is only provided on the 25/26 ppm model.
NOTE: These specifications are subject to change without notice.

1-1-2 Parts names

(1) Machine

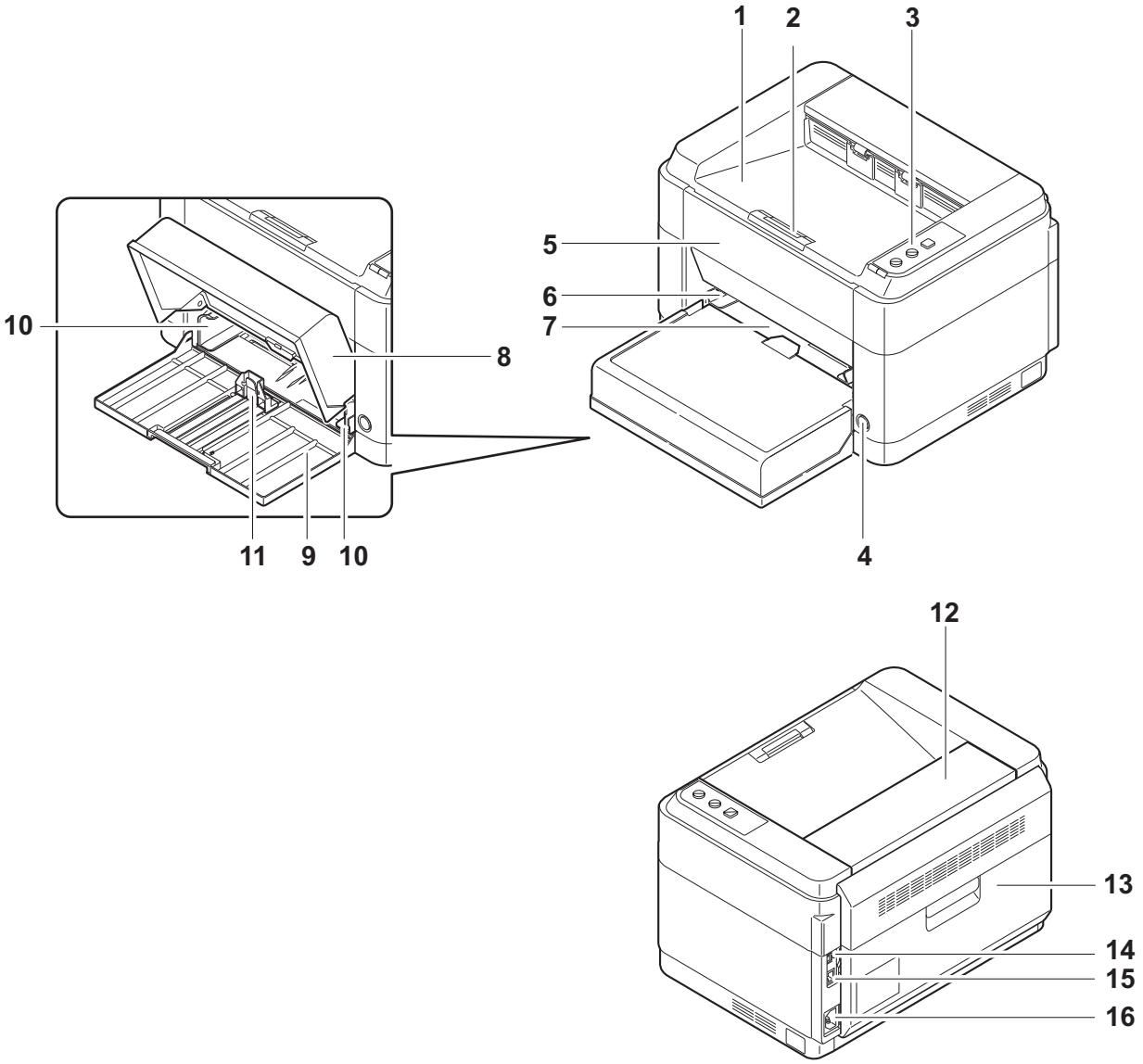

Figure 1-1-1

1. Top tray
2. Paper stopper
3. Operation panel
4. Power switch
5. Front cover
6. Manual feed paper width guides*
7. Manual feed tray*
8. Cassette cover
9. Cassette
10. Paper width guides
11. Paper length guide
12. Fuser top cover
13. Rear cover
14. USB interface connector
15. Network interface connector*
16. Power code connector

*: 25/26 ppm model only.

(2) Operation panel

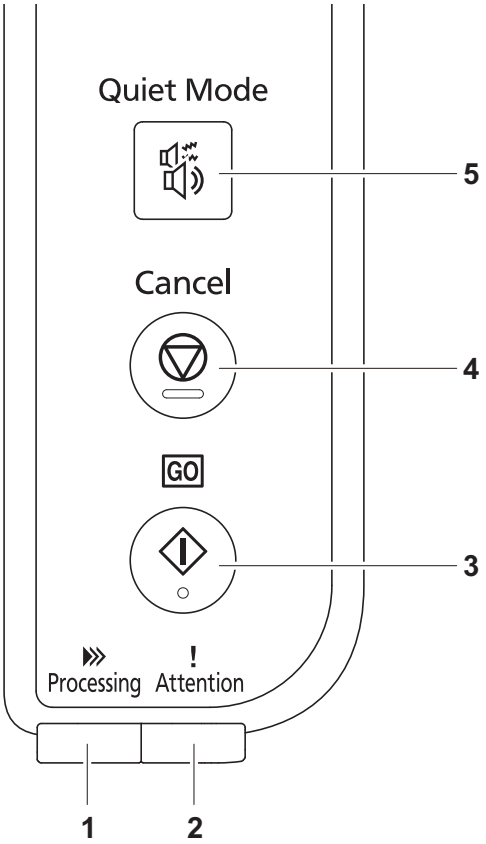

Figure 1-1-2

1. Processing indicator
2. Attention indicator
3. Go key
4. Cancel key
5. Quiet Mode key

1-1-3 Machine cross section

(1) 20/21 ppm Model

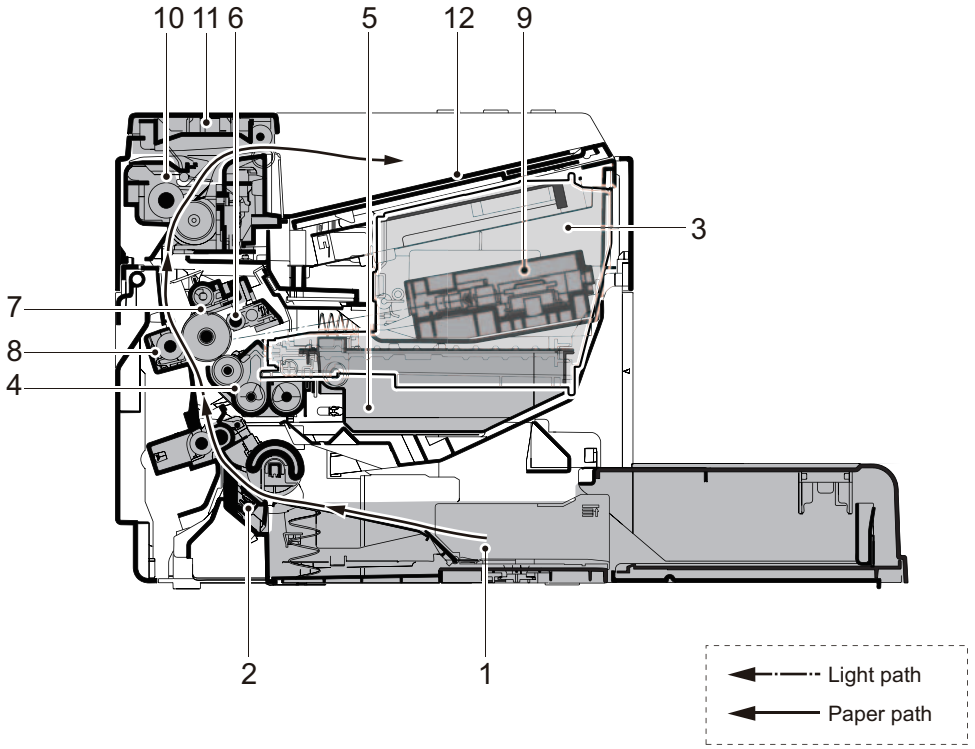

Figure 1-1-3

1. Cassette
2. Paper feed/conveying section
3. Toner container
4. Developing unit
5. Waste toner box
6. Drum charge roller
7. Drum unit
8. Transfer/separation section
9. Laser scanner unit
10. Fuser section
11. Exit section
12. Top tray

(2) 25/26 ppm Model

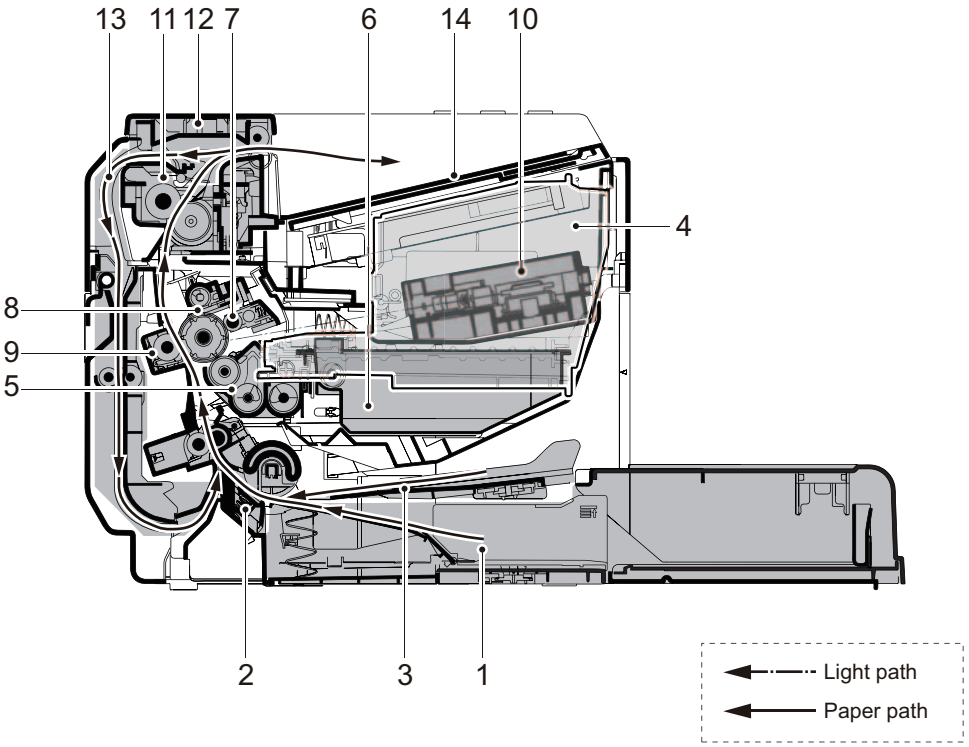

Figure 1-1-4

1. Cassette
2. Paper feed/conveying section
3. Manual feed tray
4. Toner container
5. Developing unit
6. Waste toner box
7. Drum charge roller
8. Drum unit
9. Transfer/separation section
10. Laser scanner unit
11. Fuser section
12. Feedshift/exit section
13. Duplex conveying section
14. Top tray

1-2-1 Installation environment

1. Temperature: 10 to 32.5°C/50 to 90.5°F
2. Humidity: 15 to 80% RH
3. Power supply: 120 V AC, 5.4 A
   220 - 240 V AC, 2.8 A
4. Power source frequency: 50 Hz ± 2%/60 Hz ± 2%
5. Installation location
   Avoid direct sunlight or bright lighting. Ensure that the photoconductor will not be exposed to direct sunlight or other strong light when removing paper jams.
   Avoid locations subject to high temperature and high humidity or low temperature and low humidity; an abrupt change in the environmental temperature; and cool or hot, direct air.
   Avoid places subject to dust and vibrations.
   Choose a surface capable of supporting the weight of the machine.
   Place the machine on a level surface (maximum allowance inclination: 1°).
   Avoid air-borne substances that may adversely affect the machine or degrade the photoconductor, such as mercury, acidic of alkaline vapors, inorganic gasses, NOx, SOx gases and chlorine-based organic solvents.
   Select a well-ventilated location.
6. Allow sufficient access for proper operation and maintenance of the machine.
   Machine front : 25 cm/ 10"
   Machine rear : 35 cm/ 14"
   Machine right : 20 cm/ 8"
   Machine left : 20 cm/ 8"
   Machine top : 40 cm/ 15 3/4”

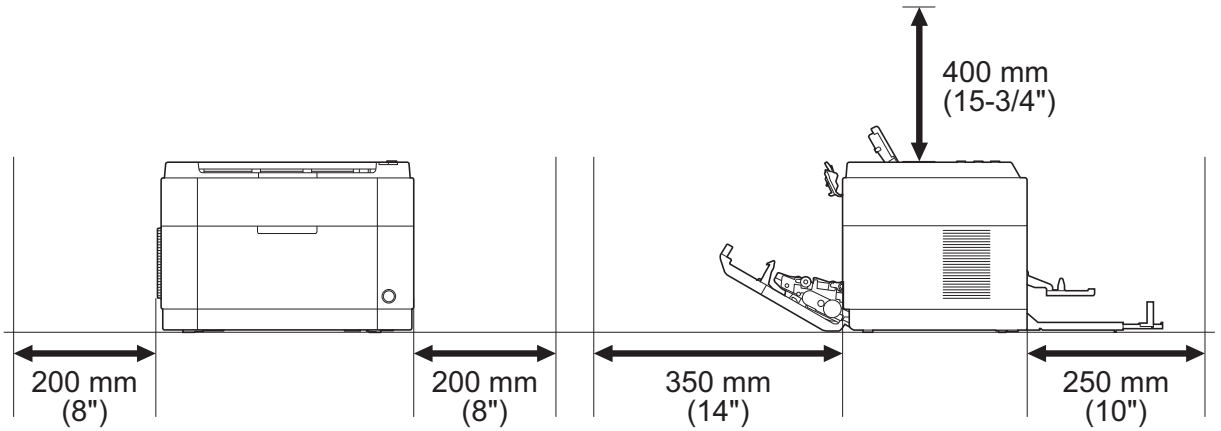

Figure 1-2-1

1-2-2 Unpacking and installation

(1) Installation procedure

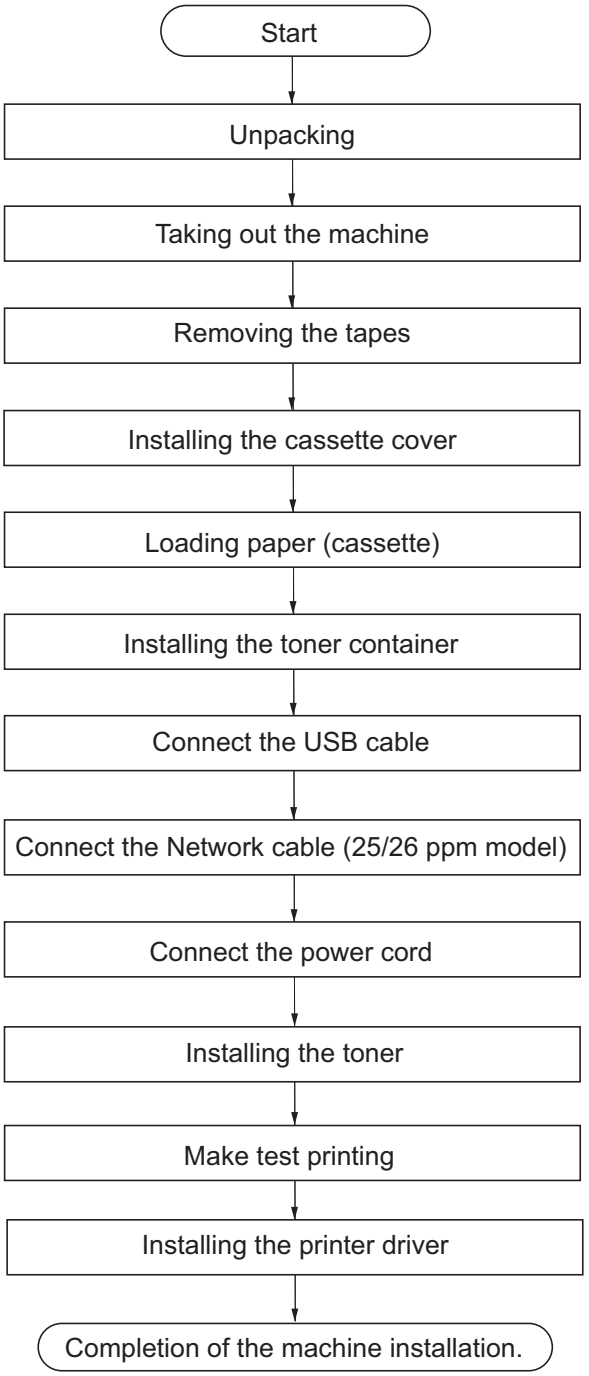

Figure 1-2-2

Unpacking

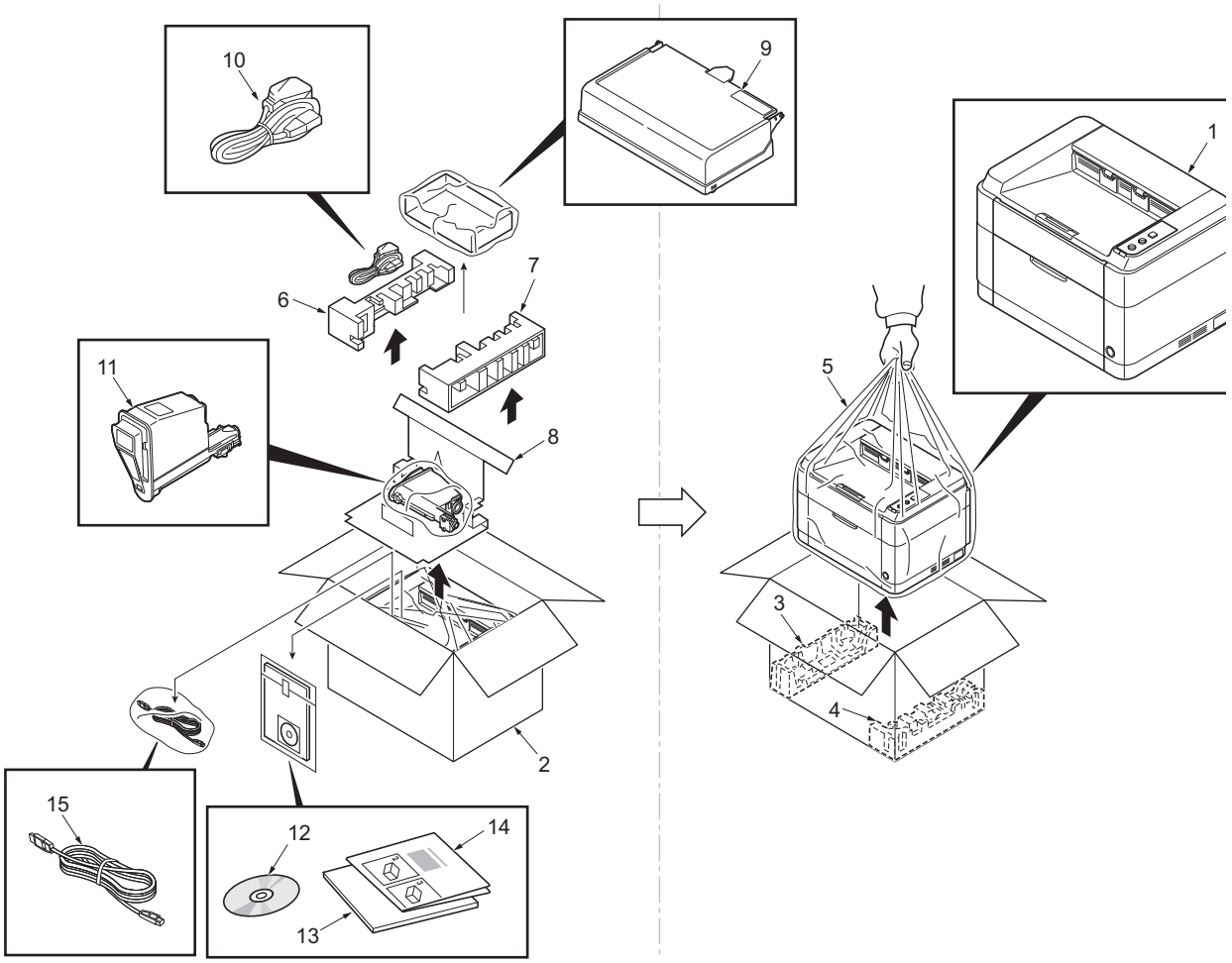

Figure 1-2-3

1. Machine
2. Outer case
3. Bottom left pad
4. Bottom right pad
5. Machine cover
6. Top left pad
7. Top right pad
8. Top spacer
9. Cassette cover
10. Power cord
11. Toner container
12. DVD
13. Operation guide
14. Quick installation guide
15. USB cable*1

*1:Chaina model only

*: Place the machine on a level surface.

Removing the tapes

1. Remove tape.

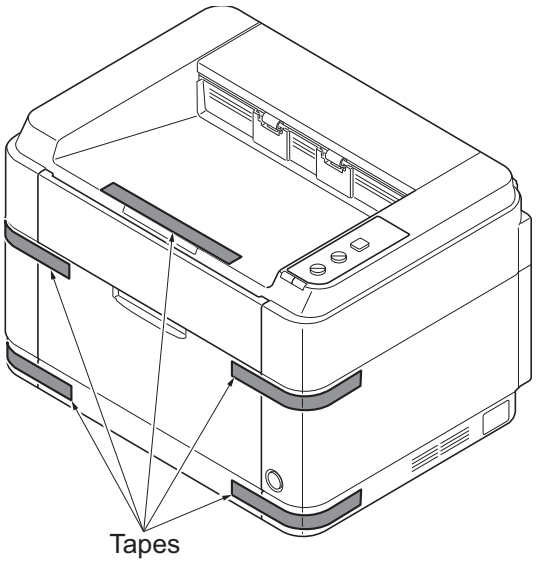

Figure 1-2-4

2. Remove two tapes.

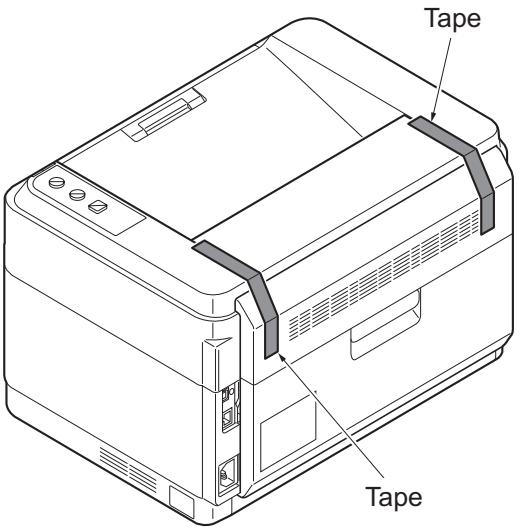

Figure 1-2-5

Installing the cassette cover

1. Attach the cassette cover.
   Attach the cassette cover so that its right and left-side pins and the boss on the machine frame mate with each other.
   *: If performing installation in a 25 ppm model, install the cassette cover so that its guide at the top is positioned above the MF base.

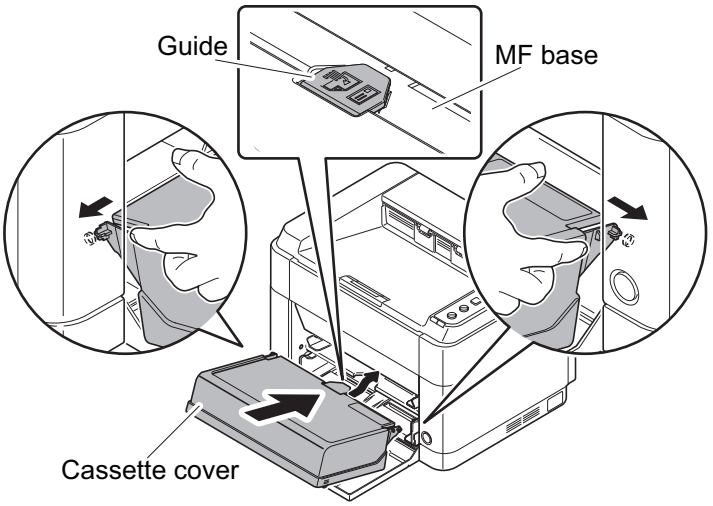

Figure 1-2-6

Loading paper (cassette)

1. Open the cassette cover.

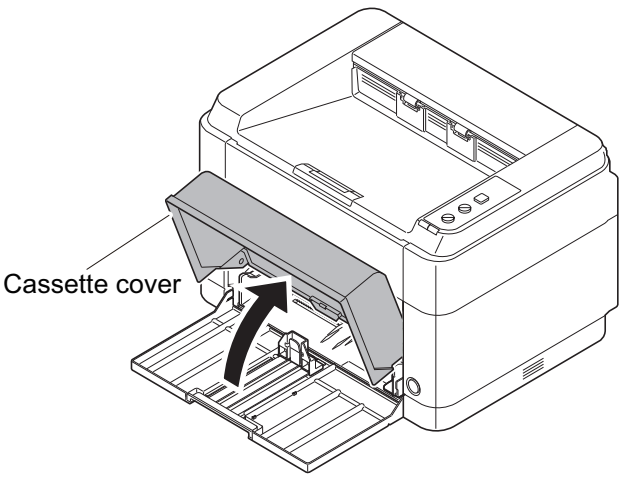

Figure 1-2-7

2. Adjust the position of the width guides located on the left and right sides of the cassette.
   *: Paper sizes are marked on the cassette.

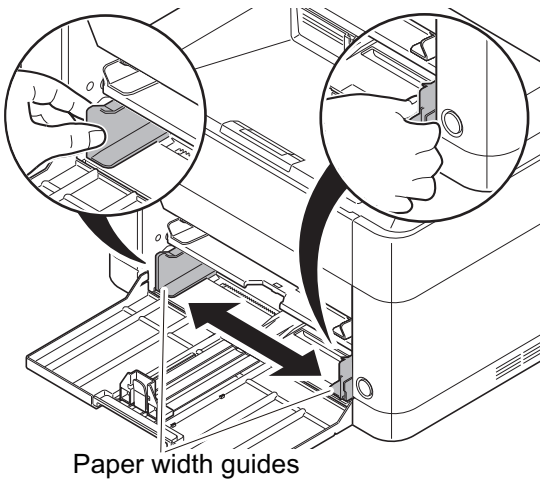

Figure 1-2-8

3. Adjust the paper length guide to the paper size required.

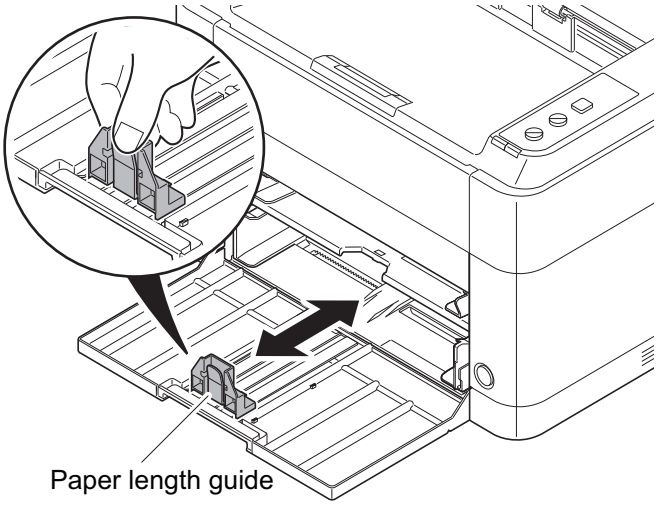

Figure 1-2-9

4. Load the paper all the way in the cassette until the paper touches the far inner side.

*: Ensure the side to be printed is facing up and the paper is not folded, curled, or damaged.

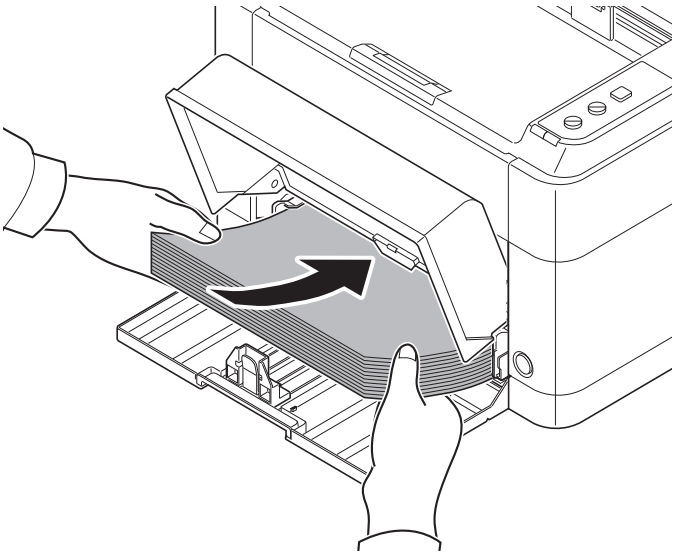

Figure 1-2-10

*: Adjust so that there is no gap between the paper length guide and the paper.

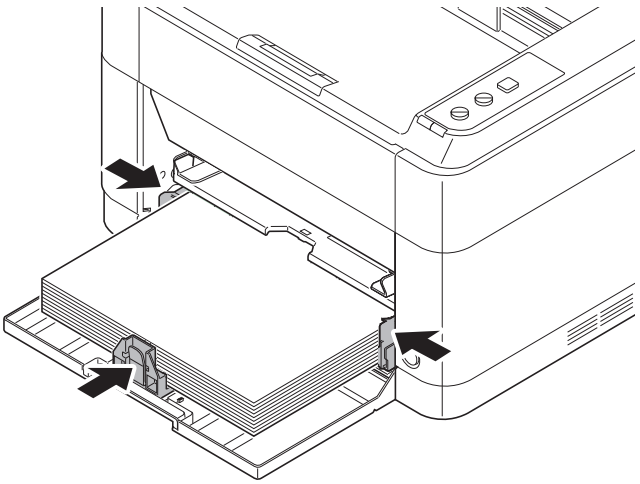

Figure 1-2-11

*: Load an amount of paper that fits under the tabs on the width guides.
*: Ensure that the loaded paper does not exceed the level indicated.

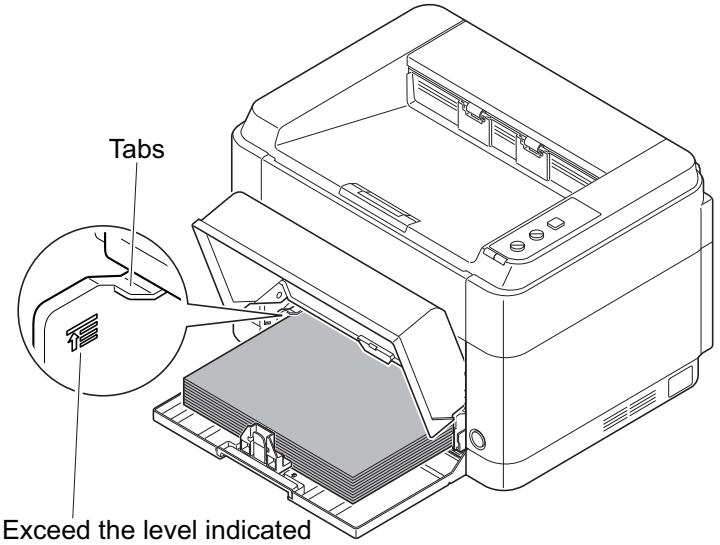

Figure 1-2-12

5. Close the cassette cover.

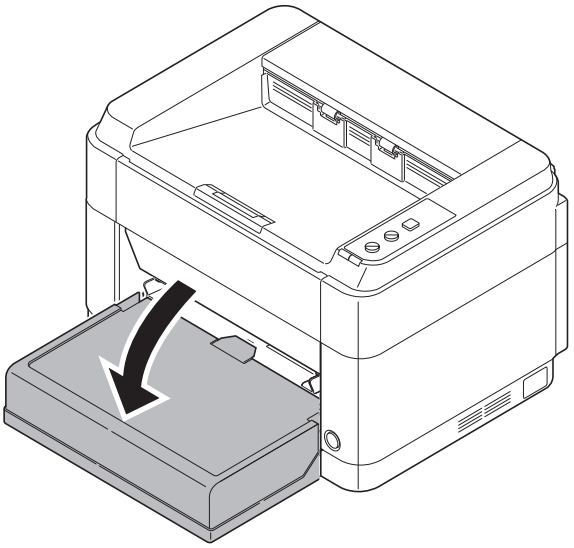

Figure 1-2-13

Installing the toner containers

1. Open the front cover.

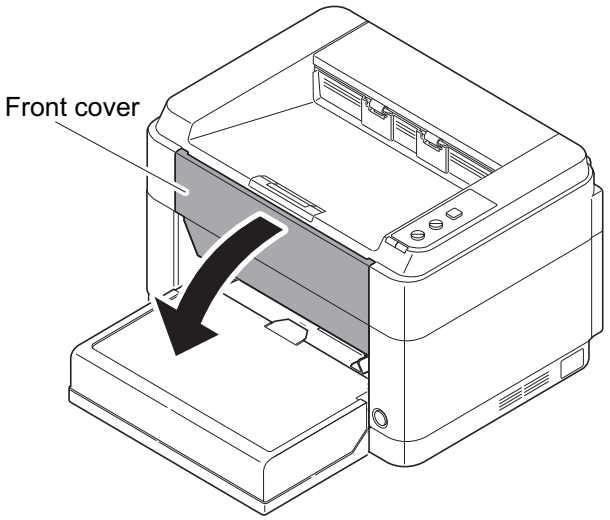

Figure 1-2-14

2. Shake the toner container at least 10 times as shown in the figure in order to distribute the toner evenly inside the container.

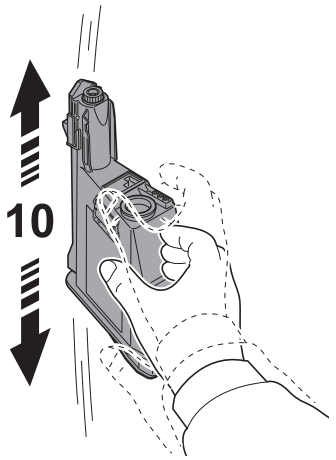

Figure 1-2-15

3. Install the toner container in the printer.
*: Push in firmly until you hear a “click” sound.

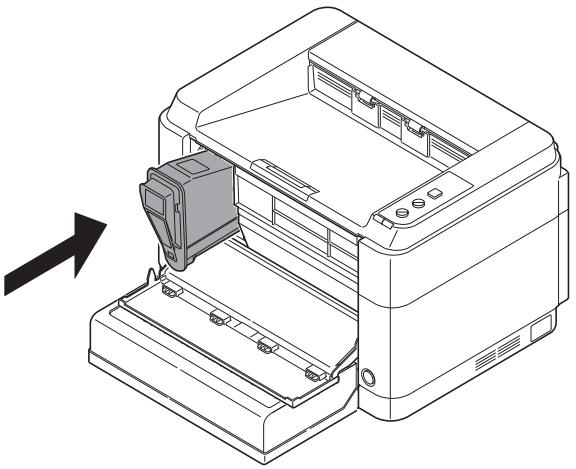

Figure 1-2-16

4. Close the front cover.

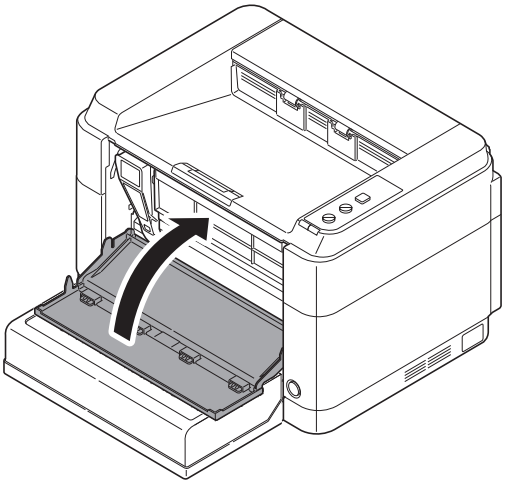

Figure 1-2-17

Connecting the USB Cable

1. Connect the USB cable (not included) to the USB interface connector. Connect the other end of the USB cable to the computer's USB interface connector.

*: China model only included.

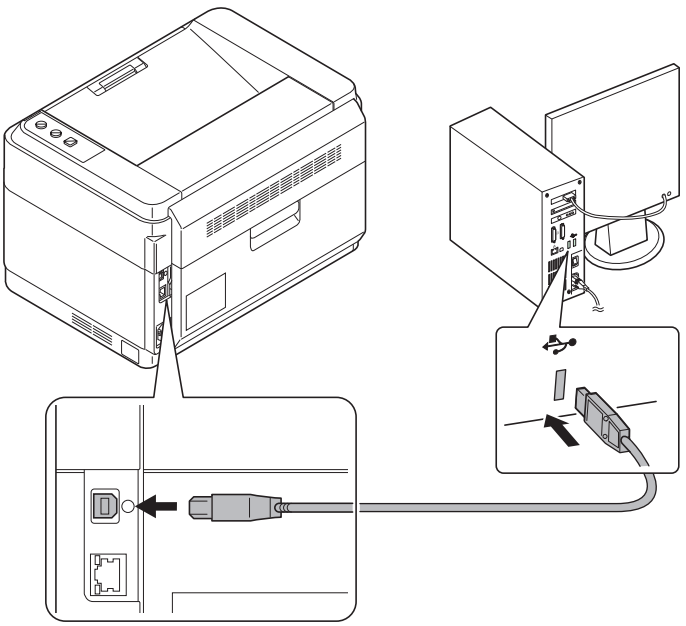

Figure 1-2-18

Connecting the Network Cable (25/26 ppm model only)

1. Connect the network cable (not included) to the network interface connector.
   Connect the other end of the cable to the PC or your network device.

*: Use shielded interface cables.

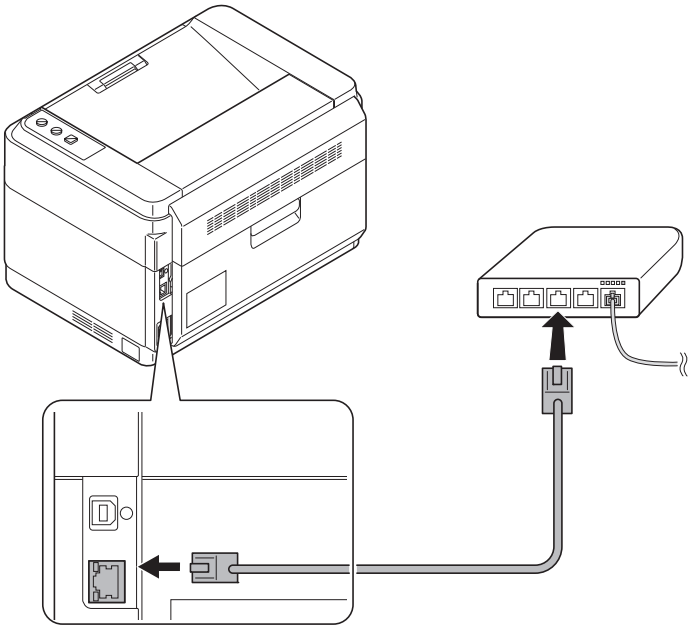

Figure 1-2-19

Connecting the power code

1. Connect the power cord to the power cord connector at the rear of the printer.
2. Connect the other end of the power cord to a power outlet.

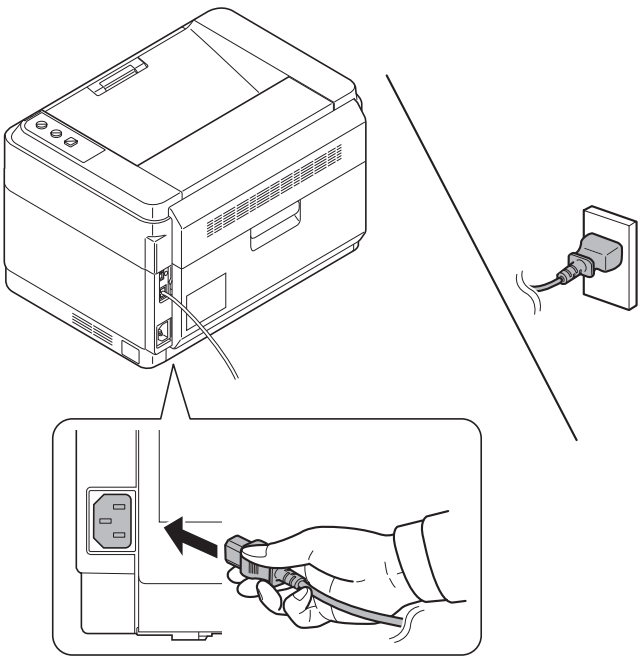

Figure 1-2-20

Installing the toner

1. Press the power switch to On.
2. Starting the toner Installation.
3. Installation is completed when toner installation has finished and the Processing indicator has turned on.

*: When the power switch is turned on, the Processing indicator the Attention indicator brink for a while simultaneously, then either turns on alternatively, and only the Processing indicator stays lit after 7 minutes.

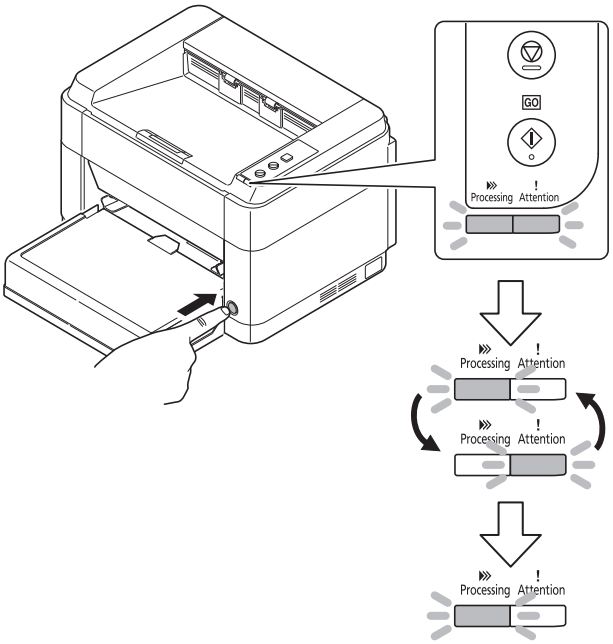

Figure 1-2-21

Make test printing

1. While the Processing indicator is lit, press the GO key for 3 to 10 seconds.
2. The status page will be printed.

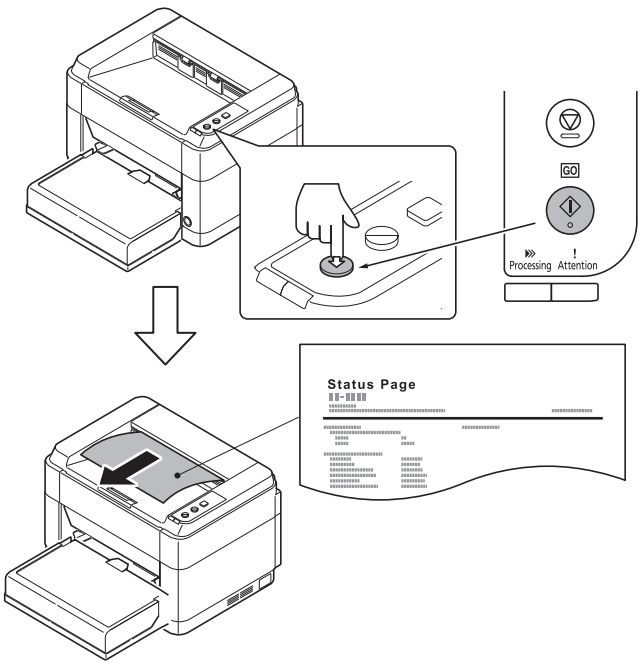

Figure 1-2-22

Installing the Printer Driver

1. Installing the Printer Driver.
   Refer to the operation guide.

Completion of the machine installation

1-3-1 Maintenance mode

The machine is equipped with a maintenance function which can be used to maintain and service the machine.

(1) Executing a maintenance items

<table>
<tr><th></th><th>Description</th></tr>
<tr><td>Status page</td><td>
Outputting an own-status report

Description
Outputs lists of the current settings of the maintenance items, and paper jam and service call occurrences. Outputs the event log or user status page.

<table>
<tr><th>Output list</th></tr>
<tr><td>Outputs the user status page</td></tr>
<tr><td>Outputs the event log</td></tr>
<tr><td>Outputs the network status page*</td></tr>
</table>
* : 25/26 ppm mode only

Printing a user status page.

Description
The status page includes various printing settings and service cumulative.

Purpose
To acquire the current printing environmental parameters and cumulative information.

Method
1. Press the GO key for 3 to 10 seconds.
2. The status page will be printed.
3. Press the GO key for 10 seconds or more.
The network status page will be printed (25/26 ppm model).
* : A4 or Letter size paper is delivered. If the machine has no A4 or Letter paper loaded, load A4 paper.
</td></tr>
</table>

	Description
	Printing the event log **Description** Prints a history list of occurrences of paper jam, self-diagnostics, toner replacements, etc. **Purpose** To allow machine malfunction analysis based on the frequency of paper misfeeds, self diagnostic errors and replacements. **Method** **Output from operating panel** 1. Press the GO key for 20 seconds or more. 2. The event log will be printed.

	Description
User status page	**User status page**

Status Page

FS-1060DN

(1) [XXXXXXXX]
(2) Firmware version 2M3_2000.001.001 2012.02.02
(3) [XXXXXXXX]
(4) [XXXXXXXX]

(5) Paper Settings
(6) Cassette&MP tray Size/Type: A4/Plain

(7) Device Common Setting
(8) Network: Enabled
(9) USB Cable: Enabled
(10) Error Clear Time: 5 Seconds
(11) Sleep Timer: 30 Minutes
(12) Power Off Timer: 1 week
(13) Form Feed Time Out: 30 Seconds

(14) Network
(15) LAN Interface
(16) Setting: Auto
(17) Current: 100BASE-TX Full
(18) TCP/IP
(19) Status: Enabled
(20) Printer Host Name: KM5D0213
(21) IPv4
(22) DHCPv4 Status: Enable
(23) IP Address: 10.183.53.13
(24) Subnet Mask: 255.255.24.0
(25) Default Gateway: 10.183.48.252

(26) Counters
(27) Printed Page 1000

(28) Print Coverage 10.00%
(A4/Letter Conversion)

(29) Toner Gauge 100%

12345678/11223344/00001234abcd567800001234abcd5678/01234567890123456789012345678 90
1/0008/00/07/
01/04/01/123456/1/02/20/9999999/23456
(30)(31)(32)(33)(34)(35)(36)(37)(38)

Figure 1-3-1

	Description
	Detail of User status page

No.	Description	Supplement
(1)	Machine serial No.	-
(2)	Firmware version	-
(3)	Engine soft version	-
(4)	Engine Boot soft version	-
(5)	Paper Setting	-
(6)	Cassette & Manual feed tray Size/Type	Paper size: A4,A5,A6,B5,16K,Custom,Legal,Officio, 216x340mm,Letter,Executive,Statement,Folio Paper type: Plain,Preprinted,Labels,Bond,Recycled,Vellum, Rough,Letterhead,Color,Prepunched,Envelope, Cardstock,Thick,High quality,Custom 1to 8
(7)	Device Common Setting	-
(8)	Network	Enabled / Disabled
(9)	USB Cable	Enabled / Disabled
(10)	Error Clear Time	5 to 495 Seconds
(11)	Sleep Timer	1 to 240 Minutes
(12)	Power Off Timer	1 hour, 2 hours, 3 hours, 4 hours, 5 hours, 6 hours, 9 hours, 12 hours, 1 day, 2 days, 3 days, 4 days, 5 days, 6 days, 1 week
(13)	Form Feed Time Out	5 to 495 Seconds
(14)	Network (25/26 ppm model only)	-
(15)	LAN Interface	-
(16)	Setting	Auto,10Base-Half,10Base-Full,100Base-Half,100Base-Full
(17)	Current	10Base-Half,10Base-Full,100Base-Half,100Base-Full,Not Connected
(18)	TCP/IP	-
(19)	Status	Enabled / Disabled
(20)	Printer Host Name	“KM”+Lower 6 figure of a MAC Address
(21)	IPv4	-
(22)	DHCPv4 Status	Enabled / Disabled
(23)	IP Address	IP address / Not Defined
(24)	Subnet Mask	Subnet Mask / Not Defined
(25)	Default Gateway	Default Gateway / Not Defined
(26)	Counters	-
(27)	Printed Page	0 to 9999999

	Description

No.	Description	Supplement
(28)	Print coverage	0 to 100%
(29)	Toner Gauge	0 to 100%
(30)	Print Density	Default: 3(1 to 5)
(31)	Main-Charger correction value	Default: 4(1 to 7)
(32)	High-Altitude mode	Default: 0(0 to 2)
(33)	Drum unit driving time	-
(34)	Area code(AREA)	-
(35)	Product code(PRDT)	-
(36)	Outside temperature	-
(37)	Maintenance kit counter	-
(38)	Add the electrified time counter.	-

	Description
Event Log	**Event Log**

Event Log

FS-1060DN

(1) [XXXXXXXX]
(2) Firmware version 2M2_2000.000.000 2011.12.17
(3) [XXXXXXXX]
(4) [XXXXXXXX]

(5) Paper Jam Log

#	Count.	Jam Code
8	1111111	0511
7	999999	4211
6	888888	0518
5	777777	4211
4	666666	0518
3	555555	4020
2	444444	0518
1	1	4020

(6) Service Call Log

#	Count.	Service Code
8	1111111	01.6000
7	999999	01.2100
6	888888	01.4000
5	777777	01.6000
4	666666	01.2100
3	555555	01.4000
2	444444	01.6000
1	1	01.2100

(7) Maintenance Log

#	Count.	Item.
3	555555	01.00
2	444444	01.00
1	1	01.00

(8) Non-genuine Toner Log

#	Count.	Item.
5	1111111	01.00
4	999999	01.00
3	888888	01.00
2	777777	01.00
1	666666	01.00

(9) Counter Log

(a)

J0508:	0
J0511:	1
J0518:	11
J4020:	22
J4201:	1
J4208:	1
J4211:	1
J4218:	1
J4220:	1
J4301:	1
J4311:	1

(b)

C0100:	0
C0120:	1
C2000:	2
C4200:	3
C6020:	4
C6030:	5

Figure 1-3-2

	Description

Detail of Event Log

No.	Items	Description		
(1)	Machine serial No.			
(2)	Firmware version			
(3)	Engine soft version			
(4)	Engine Boot soft version			
(5)	Paper Jam Log	#	Count.	Event
		Remembers 1 to 8 of occurrence. If the occurrence of the previous paper jam is less than 8, all of the paper jams are logged. When the occurrence excesseds 8, the oldest occurrence is removed.	The total page count at the time of the paper jam.	Log code Cause of a paper jam (See page 1-4-1)
		For details on the case of paper jam, refer to Paper Misfeed Detection (See page 1-4-6).		
(6)	Service Call Log	#	Count.	Service Code
		Remembers 1 to 8 of occurrence of self diagnostics error. If the occurrence of the previous diagnostics error is less than 8, all of the diagnostics errors are logged.	The total page count at the time of the self diagnostics error.	Self diagnostic error code (See page 1-4-6). Example: 01.6000 01: Self diagnostic error 6000: Self diagnostic error code number
(7)	Maintenance Log	#	Count.	Item
		Remembers 1 to 8 of occurrence of replacement. If the occurrence of the previous replacement of toner container is less than 8, all of the occurrences of replacement are logged.	The total page count at the time of the replacement of the toner container.	Code of maintenance replacing item (1 byte, 2 categories) First byte (Replacing item) 01: Toner container Second byte (Type of replacing item) 00: Black(Fixed) First byte (Replacing item) 02: Maintenance kit Second byte (Type of replacing item) 01: MK-1110/MK-1120 02: Developer unit 03: Drum unit
		Data is stored by following the procedure after the unit has been changed. (See page 2-4-13),(See page 2-4-14)		

	Description

No.	Items	Description		
(8)	Non-genuine Toner Log	#	Count.	Item
		Remembers 1 to 5 of occurrence of unknown toner detection. If the occurrence of the previous unknown toner detection is less than 5, all of the unknown toner detection are logged.	The total page count at the time of the toner empty error with using an non-genuine toner container.	Non-genuine toner log code (1 byte, 2 categories) First byte 01: Toner container (Fixed) Second byte 00: Black
(9)	Counter Log Comprised of three log counters including paper jams, self diagnostics errors.	(a) Paper jam	(b) Self diagnostic error	
		Indicates the log counter of paper jams depending on location. Refer to Paper Jam Log. All instances including those are not occurred are displayed.	Indicates the log counter of self diagnostics errors depending on cause. Example: C6000: 4 Self diagnostics error 6000 has happened four times.	

	Description
Net-work status page	**Network status page**

Network Status Page

FS-1060DN

(1) [XXXXXXXX]
(2) Firmware version 2M2_2000.000.000 2011.12.17
(3) [XXXXXXXX]
(4) [XXXXXXXX]

(5) **Network Detail**
(6) MAC Address: 00:00:00:00:00:01

(7) **LAN Interface**
(8) Setting: Not Connected
(9) Current: Not Connected

(10) **Raw Port**
(11) Status: Enabled

(12) **LPD**
(13) Status: Enabled

(14) **WSD-PRINT**
(15) Status: Enabled

(16) **TCP / IP**
(17) Status: Enabled
(18) Printer Host Name: KM000001
(19) IPv4:
(20) DHCPv4 Status: Enabled
(21) Auto IP: Enabled
(22) IP Address: Not Defined
(23) Subnet Mask: Not Defined
(24) Default Gateway: Not Defined

Figure 1-3-3

	Description
	Detail of Network status page

No.	Description	Supplement
(1)	Machine serial No.	-
(2)	Firmware version	-
(3)	Engine soft version	-
(4)	Engine Boot soft version	-
(5)	Network Detail	-
(6)	MAC Address	Display MAC Address
(7)	LAN Interface	-
(8)	Setting	Auto,10Base-Half,10Base-Full,100Base-Half, 100Base-Full
(9)	Current	The present transmission standard is displayed.
(10)	Raw Port	-
(11)	Status	Enabled / Disabled
(12)	LPD	-
(13)	Status	Enabled / Disabled
(14)	WSD-PRINT	-
(15)	Status	Enabled / Disabled
(16)	TCP/IP	-
(17)	Status	Enabled / Disabled
(18)	Printer Host Name	“KM”+Lower 4 figure of a MAC Address
(19)	IPv4	-
(20)	DHCPv4 Status	Enabled / Disabled
(21)	Auto IP	Enabled / Disabled
(22)	IP Address	IP address /Not Defined
(23)	Subnet Mask	Subnet Mask /Not Defined
(24)	Default Gateway	Default Gateway /Not Defined

1-3-2 Maintenance menu

KYOCERA Client Tool provides maintenance menus which allow you to optimize print quality, printing positions, factory default settings, etc.
The Load Package button allows you to make settings provided by the Service Package.
The maintenance menus include the following items:

1. In the KYOCERA client tool dialog box, select a device from the list.
2. Click Maintenance > Maintenance Menu
3. Select one or more items in the list, and select the desired settings for each feature.
4. You can click Cancel to return to the previous view or to select another maintenance procedure.
5. When all settings are selected, click Apply to finish.

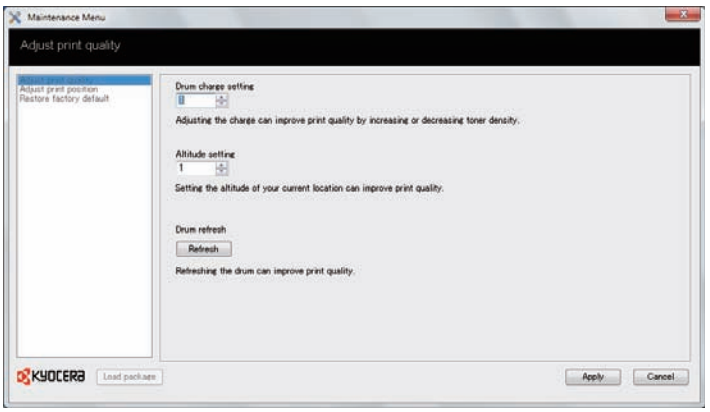

Figure 1-3-4

(1) Items for various settings

Maintenance menu	Items	Description
Image quality compensation	MC compensation	Select the main charge voltage of the drum unit, from 0 to 7. (default: 4) A higher setting makes it less dense. A lower setting makes the print output denser.
	Altitude Setup	Select the altitude of your location:(default: 0) 0:0 to1500 meters (0 to 4921feet) 1:1500 to 2500 meters(4921 to 8202 feet) 2:2500 to 3500meters (8202 to 11,482.8 feet).
	Drum Refresh	Select to clean the drum unit if printout appear blurry or has spots where information is missing.
Printing position Adjustment	This feature adjusts the starting position (top and left) for print output,from -10 to +10.Each unit of change moves the position by 0.1mm.	
	Top	Select the top margin starting position for printing from the cassette and for duplex printing.
	Left	Select the left margin starting position for printing from the cassette and for duplex printing.
Print Margin Adjustment	This feature adjusts margins for print output,from 0 to 10.0, if margins are not printing correctly. A higher setting makes the margin wider. A lower setting makes the margin narrower.	
	Top	Select to adjust the leading edge margin at the top of the page.
	Left	Select to adjust the left margin.
	Right	Select to adjust the right margin.
	Bottom	Select to adjust the trailing edge margin at the bottom of the page.
Factory Default	This feature restores the device to the factory default settings.	
	Restore Default	Press the button to restore default settings,and then click OK.

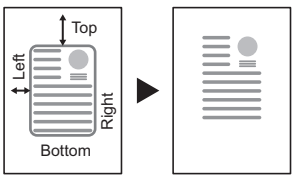

Top:10, Left:0

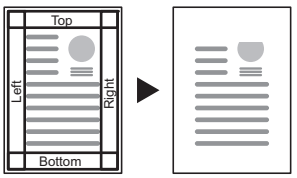

Top:10, Bottom:0,Left:0,Right:0

(2) Service package

A service package can be used to deliver event logs and set drum-ranks.
The items for settings using a service package are as follows:

* : Obtain a service package in prior.

Open the Service Package

1. In the Maintenance Menu dialog box, click Load package, and then browse to find a user package file (.MTP). If a password is required, enter the password.

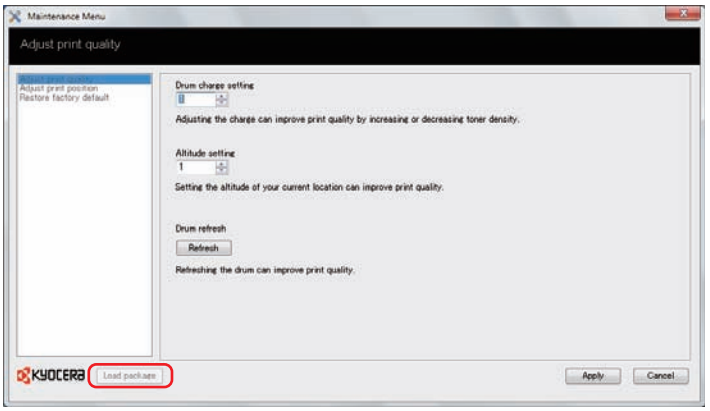

Figure 1-3-5

2. Select items in the list, and select the desired settings for each feature.

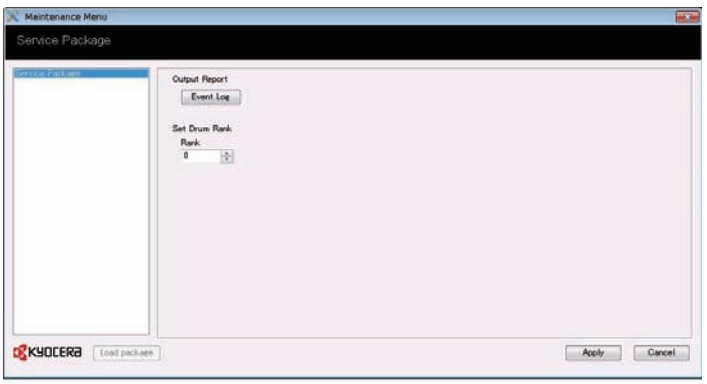

Figure 1-3-6

Select the item.

Display	Description
Output report	Printing the event log
Set drum rank	Setting the drum rank

Printing the event log

Procedure

1. Click the Event Log.
2. Click the check box to acknowledge.
3. The event log will be printed.

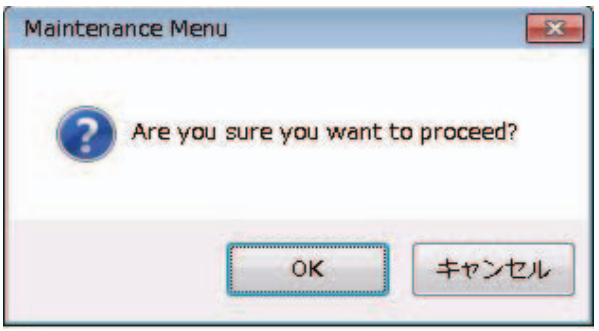

Figure 1-3-7

Drum rank settings

Drums are ranked in three depending on the fluctuation in sensitivity.
Exercising the procedures that follow the replacement of maintenance kit or drum unit, the rank of drum is automatically set to the default, 2.
If the rank differs, set the correct rank manually.
If the rank is not properly set with the drum unit, it is possible that gray background may occur or the productivity of fine lines may be deteriorated.

Procedure

1. Check the rank of the drum.
   Where the rank is found: Barcode label affixed on the drum unit
2. Enter the correct rank of the drum.
3. Press Apply to complete.

1-4-1 Paper misfeed detection

(1) Paper misfeed indication

If paper jams in the paper conveying system, or no paper sheets are fed at all, the printer automatically goes offline, and the Attention indicator will flash rapidly. A jam code is logged on the event log. When the jammed paper is removed and the rear cover is closed, the printer reverts to normal operation and resumes printing.

* : If paper jam has occurred with no paper jammed, press GO to resume normal operation.

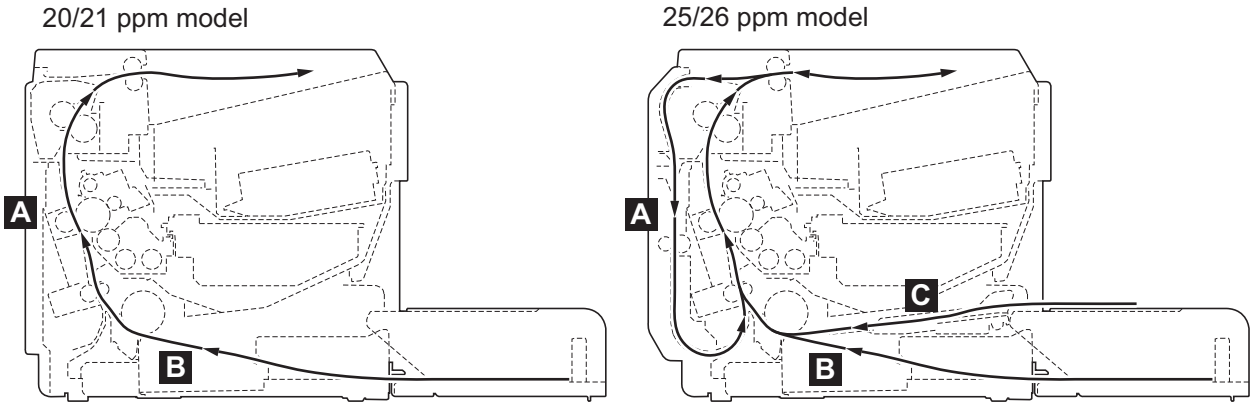

Figure 1-4-1 Paper misfeed indication

A. Misfeed in conveying unit or duplex section
B. Misfeed in cassette
C. Misfeed in Manual Feed tray

(2) Paper misfeed detection condition

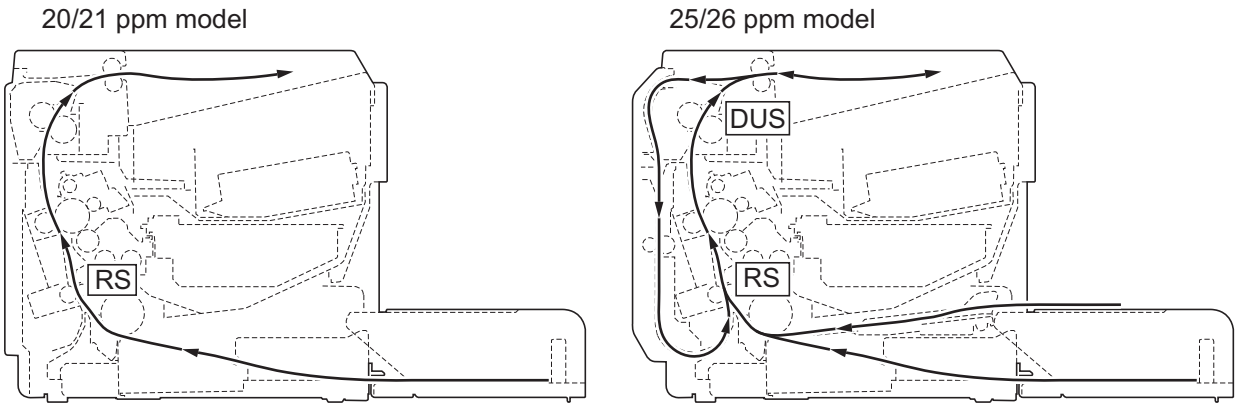

Figure 1-4-2 Paper jam location

Code	Contents	Conditions	Jam location*
0111	Rear cover open	Cover is opened during printing.	-
0508	No paper feed from duplex section(25/26ppm model)	Registration sensor (RS) does not turn on in 2.4 seconds after the duplex sensor (DUS) has turned on, during paper is feed from the duplex section.	A
0511	Multiple sheets in cassette	Registration sensor (RS) does not turn off in (3.4/ 2.7)*1 seconds after the registration sensor (RS) has turned on, during paper is feed from the cassette or MF tray.	B
0518	Multiple sheets in duplex section(25/26ppm model)	Registration sensor (RS) does not turn off in 2.7 seconds after the registration sensor (RS) has turned on, during paper is feed from the duplex section.	B
4020	Registration sensor on (Power up or warm up)	Duplex sensor (DUS) does not turn on in 1.0 seconds after the registration sensor (RS) has turned on, during paper is feed from the cassette or MF tray.	B
4201	Duplex sensor non arrival jam(25/26ppm model)	Duplex sensor (DUS) does not turn on in 1.0 seconds after the registration sensor (RS) has turned on, during paper is feed from the cassette or MF tray.	B,C
4208	Duplex sensor non arrival jam(25/26ppm model)	Duplex sensor (DUS) does not turn on in 1.0 seconds after the registration sensor (RS) has turned on, during paper is feed from the duplex section.	A
4211	Duplex sensor stay jam(25/ 26ppm model)	Duplex sensor (DUS) does not turn off in 1.0 seconds after the registration sensor (RS) has turned off, during paper is feed from the cassette or MF tray.	A

*: Refer to figure 1-4-1 for paper misfeed indication (see page 1-4-1).

Code	Contents	Conditions	Jam location*
4218	Duplex sensor stay jam(25/26ppm model)	Duplex sensor (DUS) does not turn off in 1.0 seconds after the registration sensor (RS) has turned off, during paper is feed from the duplex section.	A
4220	Duplex sensor on (25/26ppm model) (Power up or warm up)	Paper is present at the duplex sensor during power up or warm up.	A
4301	Duplex sensor non arrival jam(25/26ppm model)	The duplex sensor (DUS) won't turn on in 0.6 second after a certain period of time switch-back has started (cassette and MPF feeding).	B,C
4311	Duplex sensor stay jam(25/26ppm model)	The duplex sensor (DUS) won't turn off in 3.0 second after a certain period of time switch-back has started (cassette and MPF feeding).	A

*: Refer to figure 1-4-1 for paper misfeed indication (see page 1-4-1).

*1: (20/21 ppm / 25/26 ppm model)

1-4-2 Self-diagnostic function

(1) Self-diagnostic function

The printer is equipped with self-diagnostic function which automatically halts the printer when an error is detected.
The two indicator (Processing, Attention) are simultaneously lit (5 sec), then indicate a specific error by the combination of the two indicator.

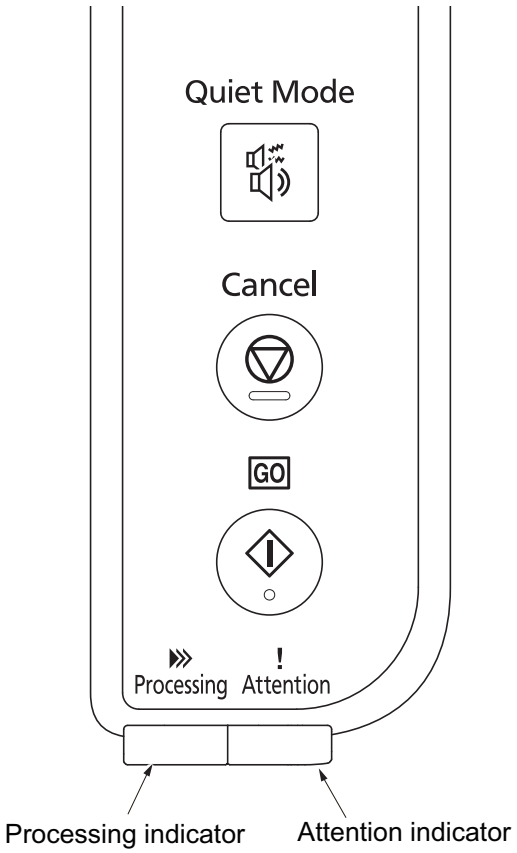

Figure 1-4-3

(2) Self diagnostic codes indication

This item consists of following two.
1.State of all indicator are ON (5.0 sec). And then, state of all indicator are OFF (2.0 sec).It expresses by this method that they are Service Call or System Error.
2.It expresses Service Call number or System Error number. Processing indicator blinks with a regular interval (0.8 seconds). It is 1, if Attention indicator is ON when Processing indicator is ON. It is 0, if Attention indicator is OFF when Processing indicator is ON. This shall be one set and 16 bits (they are 4 digits at hexadecimal) of repetitions are expressed 16 times. (The following page is a example of “4631”)

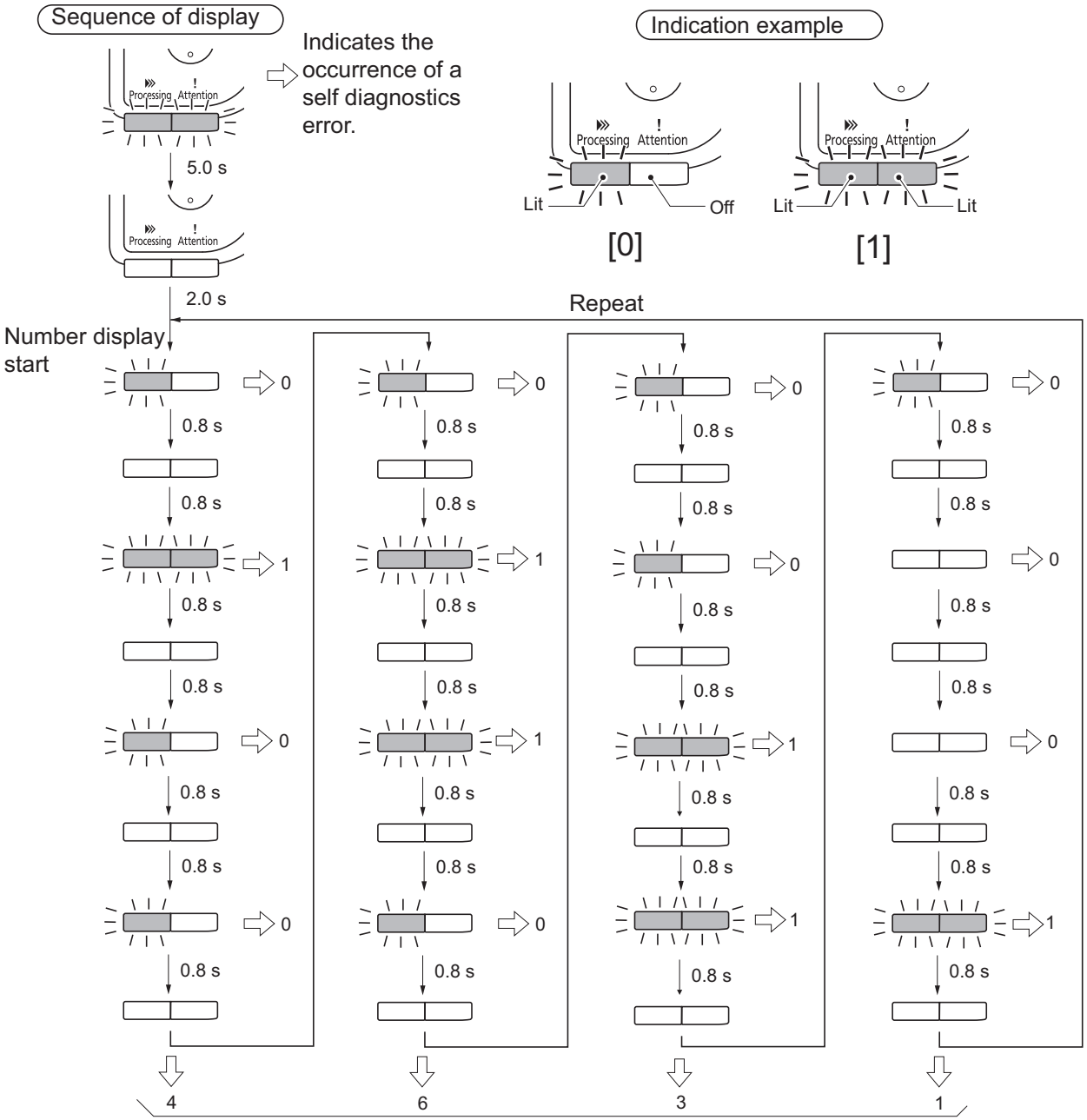

Code conversion table

Code	0	1	2	3	4	5
Indicator	(0000)	(0001)	(0010)	(0011)	(0100)	(0101)
Code	6	7	8	9	F	
Indicator	(0110)	(0111)	(1000)	(1001)	(1111)	

Figure 1-4-4

(3) Self diagnostic codes

If the part causing the problem was not supplied, use the unit including the part for replacement.
Release is performed by power supply OFF/ON.

Code	Contents	Causes	Check procedures/ corrective measures
0100	**Backup memory read/write error (NOR)** Flash returns an abnormal status.	Defective flash memory.	Replace the main PWB and check for correct operation (see page 1-5-7).
		Defective main PWB.	Replace the main PWB and check for correct operation (see page 1-5-7).
0120	**MAC address data error** For data in which the MAC address is invalid.	Defective flash memory.	Replace the main PWB and check for correct operation (see page 1-5-7).
0190	**Backup memory error (engine)** Unable to read the main PWB IC.	Defective flash memory.	Replace the main PWB and check for correct operation (see page 1-5-7).
		Defective main PWB.	Replace the main PWB and check for correct operation (see page 1-5-7).
0630	**Scan DMA error** Unable to transfer DMA.	Defective main PWB.	Replace the main PWB and check for correct operation (see page 1-5-7).
2000	**Main motor error** Pulse is not detected after 1000msec. Motor won't stabilize after 300msec.	Defective connector cable or poor contact in the connector.	Reinsert the connector. Also check for continuity within the connector cable. If none, replace the cable. main motor and Relay PWB (YC4) Relay PWB and main PWB (YC14).
		Defective drive transmission system of motor.	Check if the gears rotate smoothly. If not, grease the bushes and gears. Check for broken gears and replace if any.
		Defective motor.	Replace the main motor.
		Defective main PWB.	Replace the main PWB and check for correct operation (see page 1-5-7).
4000	**Polygon motor synchronize error** Polygon motor is not stabilized within 15 s since the motor is activated. After polygon motor is stabilized, the ready signal is not detected for 7 s continuously.	Defective connector cable or poor contact in the connector.	Reinsert the connector. Also check for continuity within the connector cable. If none, replace the cable. Polygon motor and main PWB (YC17)
		Defective polygon motor.	Replace the laser scanner unit (see page 1-5-12).
		Defective main PWB.	Replace the main PWB and check for correct operation (see page 1-5-7).
4200	**BD stability error** The BD signal is not detected for 1000 ms after processing the compulsion lighting. At the interrupt in VSYNC, the BD error is detected continuously for 10 times in 400 ms intervals.	Defective connector cable or poor contact in the connector.	Reinsert the connector. Also check for continuity within the connector cable. If none, replace the cable. Laser scanner unit (YC1) and main PWB (YC5)
		Defective APC PWB.	Replace the laser scanner unit (see page 1-5-12).
		Defective main PWB.	Replace the main PWB and check for correct operation (see page 1-5-7).

Code	Contents	Causes	Check procedures/ corrective measures
6000	**Broken fuser heater** The temperature does not reach 100° C/212 °F after the fuser heater lamp has been turned on continuously for 30 s. At the time of 20 degrees or less from specified temperature,the fuser temperature does not rise by 2 degrees or more after the fuser heater lamp has been turned on continuously for 8 s.(during ready or during print)	Defective connector cable or poor contact in the connector.	Reinsert the connector. Also check for continuity within the connector cable. If none, replace the cable. fuser heater lamp and Power source PWB (YC102).
		Fuser thermostat triggered.	Replace the fuser unit (see page 1-5-6).
		Defective fuser heater.	Replace the fuser unit (see page 1-5-6).
		Defective main PWB.	Replace the main PWB and check for correct operation (see page 1-5-7).
6020	**Abnormally high fuser thermistor temperature** Fuser thermistor detects a temperature higher than 210°C/410°F for 3 s	Deformed connector pin.	If the I/F connector pins of the fuser unit and the main unit are deformed owing to foreign matters, such as paper dusts, replace the connectors or the units including the connectors.
		Shorted fuser thermistor.	Replace the fuser unit (see page 1-5-6).
		Defective power source PWB.	Replace the power source PWB (see page 1-5-7).
		Defective main PWB.	Replace the main PWB and check for correct operation (see page 1-5-7).
6030	**Broken fuser thermistor wire** Average input AD given by the thermistor is less than 2 for 300msec.	Defective connector cable or poor contact in the connector.	Reinsert the connector. Also check for continuity within the connector cable. If none, replace the cable. Fuser unit and main PWB (YC15)
		Broken fuser thermistor wire.	Replace the fuser unit (see page 1-5-6).
		Fuser thermostat triggered.	Replace the fuser unit (see page 1-5-6).
		Defective main PWB.	Replace the main PWB and check for correct operation (see page 1-5-7).
6400	**Fixing control zerocross signal error** The ZCROSS signal does not reach the main PWB for more than 2 s.	Defective connector cable or poor contact in the connector.	Reinsert the connector. Also check for continuity within the connector cable. If none, replace the cable. Power source PWB (YC103) and main PWB (YC12)
		Defective power source PWB.	Replace the power source PWB (see page 1-5-7).
		Defective main PWB.	Replace the main PWB and check for correct operation (see page 1-5-7).

1-4-3 Image formation problems

If the part causing the problem was not supplied, use the unit including the part for replacement.

(1) No image appears (entirely white).

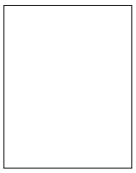

See page 1-4-9

(2) No image appears (entirely black).

See page 1-4-9

(3) Part of image is missing.

See page 1-4-10

(4) Gray background.

See page 1-4-10

(5) White streaks are printed vertically.

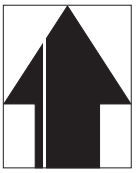

See page 1-4-11

(6) Black streaks are printed vertically.

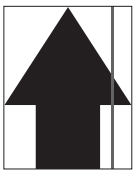

See page 1-4-11

(7) White or black streaks are printed horizontally.

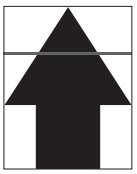

See page 1-4-11

(8) Spots are printed.

See page 1-4-12

(9) Printing incomplete or out of position

See page 1-4-12

(10) Paper is wrinkled.

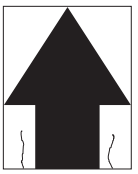

See page 1-4-12

(11) Offset occurs.

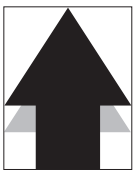

See page 1-4-13

(12) Fusing is loose.

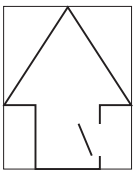

See page 1-4-13

(13) Faint or blurred printing.

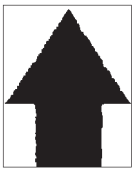

See page 1-4-13

(14) Dirt on the top edge or back of the paper.

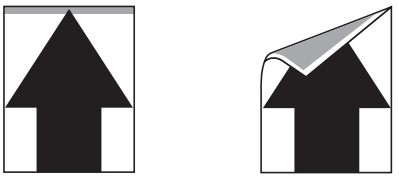

See page 1-4-14

(15) Spots in the printed objects.

See page 1-4-14

(1) No image appears (entirely white).

Print example	Causes		Check procedures/corrective measures
	Defective transfer bias output.	Defective connector cable or poor contact in the connector.	Reinsert the connector. Also check for continuity within the connector cable. If none, replace the cable. High voltage PWB (YC1) and main PWB (YC13)
		Defective high voltage PWB.	Replace the high voltage PWB (see page 1-5-7).
		Defective main PWB.	Replace the main PWB (see page 1-5-7).
	Defective developer bias output.	Defective connector cable or poor contact in the connector.	Reinsert the connector. Also check for continuity within the connector cable. If none, replace the cable. High voltage PWB (YC1) and main PWB (YC13)
		Defective high voltage PWB 1.	Replace the high voltage PWB 1 (see page 1-5-7).
		Defective main PWB.	Replace the main PWB (see page 1-5-7).
	No LSU laser is output.	Defective connector cable or poor contact in the connector.	Reinsert the connector. Also check for continuity within the connector cable. If none, replace the cable. APC PWB (YC1) and main PWB (YC5)
		Defective laser scanner unit.	Replace the laser scanner unit (see page 1-5-12).
		Defective main PWB.	Replace the main PWB (see page 1-5-7).

(2) No image appears (entirely black).

Print example	Causes		Check procedures/corrective measures
	No main charging.	Defective connector cable or poor contact in the connector.	Reinsert the connector. Also check for continuity within the connector cable. If none, replace the cable. High voltage PWB (YC1) and main PWB (YC13)
		Defective charger roller.	Replace the drum unit (see page 2-4-11).
		Defective high voltage PWB	Replace the high voltage PWB (see page 1-5-7).
		Defective main PWB.	Replace the main PWB (see page 1-5-7).
	Defective laser scanner unit.	Defective laser scanner unit.	Replace the laser scanner unit (see page 1-5-12).

(3) Part of image is missing.

Print example	Causes		Check procedures/corrective measures
	Defective developer bias output.	Defective developer unit.	Replace the developer unit (see page 2-4-10).
		Defective high voltage PWB.	Replace the high voltage PWB (see page 1-5-7).
		Defective main PWB.	Replace the main PWB (see page 1-5-7).
	Dirty or flawed drum.		Perform the drum refresh (see page 1-3-11). Flawed drum. Replace the drum unit (see page 2-4-11)
	Defective transfer bias output.	Defective high voltage PWB	Replace the high voltage PWB (see page 1-5-7).
		Defective main PWB.	Replace the main PWB (see page 1-5-7).
	Dirty transfer roller.		Clean the transfer roller. Replace the transfer roller if it is extremely dirty (see page 2-4-12).
	Insufficient agitation of toner container.		Shake the toner container vertically approximately 10 times.
	Paper damp.		Check the paper storage conditions, replace the paper.

(4) Gray background.

Print example	Causes		Check procedures/corrective measures
	Main charge voltage setting.		The main charge voltage may be set too high. Try adjusting the main charge voltage (see page 1-3-11).
	Defective potential on the drum surface.		Replace the drum unit (See page 2-4-11). * : Check the rank of the drum before exchange (see page 1-3-13).
	Defective laser scanner unit.	Defective laser output.	Replace the laser scanner unit (see page 1-5-12).
	Defective developer bias output.	Defective developer unit.	Replace the developer unit (see page 2-4-10).
		Defective high voltage PWB.	Replace the high voltage PWB (see page 1-5-7).
		Defective main PWB.	Replace the engine PWB (see page 1-5-7).

(5) White streaks are printed vertically.

Print example	Causes	Check procedures/corrective measures
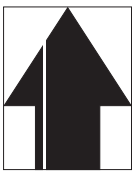	Foreign object in one of the developer units.	Replace the developer unit (see page 2-4-10).
	Dirty LSU slit glasses.	Clean the slit glasses.

(6) Black streaks are printed vertically.

Print example	Causes	Check procedures/corrective measures
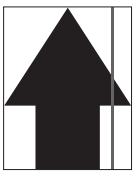	Dirty or flawed drum.	Perform the drum refresh (see page 1-3-11). Flawed drum. Replace the drum unit (see page 2-4-11)
	Deformed or worn cleaning blade in the drum unit.	Replace the drum unit (see page 2-4-11).
	Defective charger roller.	Replace the drum unit (see page 2-4-14).

(7) White or black streaks are printed horizontally.

Print example	Causes	Check procedures/corrective measures
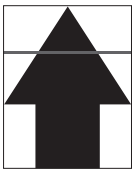	Dirty or flawed drum.	Perform the drum refresh (see page 1-3-11). Flawed drum. Replace the drum unit (see page 2-4-11).
	Dirty developer section.	Clean any part contaminated with toner in the developer section.
	Poor contact of grounding terminal of drum unit.	Check the installation of the drum unit. If it operates incorrectly, replace it (see page 2-4-11).

(8) Spots are printed.Printing incomplete or out of position

Print example	Causes		Check procedures/corrective measures
	Dirty or flawed drum.		Perform the drum refresh (see page 1-3-11). Flawed drum. Replace the drum unit (see page 2-4-11).
	Deformed or worn cleaning blade in the drum unit.		Replace the drum unit (see page 2-4-11).
	Main charge voltage setting.		The main charge voltage may be set too low. Try adjusting the main charge voltage (see page 1-3-11).
	Defective transfer bias output.	Defective high voltage PWB.	Replace the high voltage PWB (see page 1-5-7).
		Defective main PWB.	Replace the engine PWB (see page 1-5-7).
	Flawed developer roller.		Replace the developer unit (see page 2-4-10).
	Dirty heat roller and press roller.		Clean the heat roller and press roller.

(9) Printing incomplete or out of position

Print example	Causes	Check procedures/corrective measures
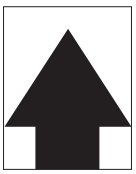	Misadjusted leading edge registration.	Run maintenance menu to readjust the leading edge registration (see page 1-3-11).
	Paper feed solenoid or main motor operating incorrectly.	Check the installation of the solenoid or motor. If it operates incorrectly, replace it.

(10) Paper is wrinkled.

Print example	Causes	Check procedures/corrective measures
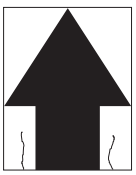	Paper curled.	Check the paper storage conditions.
	Paper damp.	Check the paper storage conditions.
	Defective pressure springs.	Replace the fuser unit (see page 1-5-6).

(11) Offset occurs.

Print example	Causes	Check procedures/corrective measures
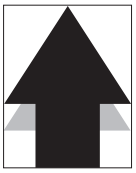	Deformed or worn cleaning blade in the drum unit.	Replace the drum unit (see page 2-4-11).
	Main charge voltage setting.	The main charge voltage may be set too high. Try adjusting the main charge voltage (see page 1-3-11).
	Defective fuser unit.	Replace the fuser unit (see page 1-5-6).
	Wrong types of paper.	Check if the paper meets specifications. Replace paper.

(12) Fusing is loose.

Print example	Causes	Check procedures/corrective measures
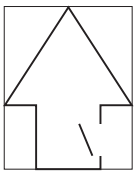	Wrong types of paper.	Check if the paper meets specifications, replace paper.
	Flawed heat roller or press roller.	Replace the fuser unit (see page 1-5-6).
	Defective pressure springs.	

(13) Faint or blurred printing

Print example	Causes		Check procedures/corrective measures
	Wrong types of paper.		Check if the paper meets specifications, replace paper.
	Drum condensation.		Perform the drum refresh (see page 1-3-11).
	Defective transfer roller installation.		The transfer roller must be supported by the bushes at the both ends. Replace the transfer roller if it is extremely dirty (see page 2-4-12).
	Defective transfer bias output.	Defective high voltage PWB	Replace the high voltage PWB (see page 1-5-7).
		Defective main PWB.	Replace the main PWB (see page 1-5-7).

(14) Dirt on the top edge or back of the paper.

Print example	Causes	Check procedures/corrective measures
	Toner contamination in various parts.	Dirty edges and back of the paper can be caused by toner accumulated on such parts as the paper guide, paper conveying paths, the bottom of the drum and developing unit, and the fuser unit inlet. Clean these areas and parts to remove toner. (see page 2-4-15).
	Dirty transfer roller.	Clean the transfer roller. Replace the transfer roller if it is extremely dirty (see page 2-4-12).

(15) Spots in the printed objects.

Print example	Causes	Check procedures/corrective measures
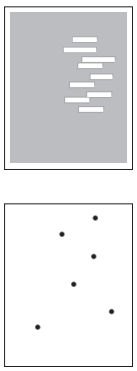	The device is installed in an altitude greater than 1500 m sea level.	Run maintenance menu in high altitude mode (see page 1-3-11).

1-4-4 Electric problems

If the part causing the problem was not supplied, use the unit including the part for replacement.
Troubleshooting to each failure must be in the order of the numbered symptoms.

Problem	Causes	Check procedures/corrective measures
(1) The machine does not operate when the main power switch is turned on.	1. No electricity at the power outlet.	Measure the input voltage.
	2. The power cord is not plugged in properly.	Check the contact between the power plug and the outlet.
	3. Broken power cord.	Check for continuity. If none, replace the cord.
	4. Defective power switch.	Check for continuity across the contacts. If none, replace the power source PWB (see page 1-5-7).
	5. Defective cover switch.	Check for continuity across the contacts of cover switch. If none, replace the power source PWB (see page 1-5-7).
	6. Defective power source PWB.	Replace the power source PWB (see page 1-5-7).
(2) Main motor does not operate.	1. Defective connector cable or poor contact in the connector.	Reinsert the connector. Also check for continuity within the connector cable. If none, replace the cable. Main motor and relay PWB (YC4) Relay PWB and main PWB (YC14)
	2. Defective drive transmission system.	Check if the rollers and gears rotate smoothly. If not, grease the bushes and gears. Check for broken gears and replace if any.
	3. Defective motor.	Replace the main motor.
	4. Defective PWB.	Replace the relay PWB or main PWB and check for correct operation (see page 1-5-7).
(3) Cooling fan motor does not operate.	1. Defective connector cable or poor contact in the connector.	Reinsert the connector. Also check for continuity within the connector cable. If none, replace the cable. Cooling fan motor and relay PWB (YC5) Relay PWB and main PWB (YC14)
	2. Defective motor.	Replace the cooling fan motor.
	3. Defective PWB.	Replace the relay PWB or main PWB and check for correct operation (see page 1-5-7).
(4) Paper feed solenoid does not operate.	1. Defective connector cable or poor contact in the connector.	Reinsert the connector. Also check for continuity within the connector cable. If none, replace the cable. Paper feed solenoid and relay PWB (YC3) Relay PWB and main PWB (YC14)
	2. Defective motor.	Replace the paper feed solenoid.
	3. Defective PWB.	Replace the relay PWB or main PWB and check for correct operation (see page 1-5-7).

Problem	Causes	Check procedures/corrective measures
(5) Duplex solenoid does not operate. (25/26 ppm model only)	1. Defective connector cable or poor contact in the connector.	Reinsert the connector. Also check for continuity within the connector cable. If none, replace the cable. Duplex solenoid and relay PWB (YC2) Relay PWB and main PWB (YC14)
	2. Defective solenoid.	Replace the duplex solenoid.
	3. Defective PWB.	Replace the relay PWB or main PWB and check for correct operation (see page 1-5-7).
(6) Eraser lamp does not turn on.	1. Defective connector cable or poor contact in the connector.	Reinsert the connector. Also check for continuity within the connector cable. If none, replace the cable. Eraser lamp PWB and main PWB (YC20)
	2. Defective Eraser lamp.	Replace the Eraser lamp PWB.
	3. Defective PWB.	Replace the main PWB and check for correct operation (see page 1-5-7).
(7) A paper jam in the paper feed/conveying section or fuser section is indicated when the power switch is turned on.	1. A piece of paper torn from paper is caught around registration sensor or duplex sensor.	Check visually and remove it, if any.
	2. Defective sensor.	Replace the registration sensor or duplex sensor.
(8) Attention indicator is lit when the front and rear cover is closed.	1. Defective connector cable or poor contact in the connector.	Reinsert the connector. Also check for continuity within the connector cable. If none, replace the cable. Power source PWB (YC103) and main PWB (YC12)
	2. Defective switch.	Check for continuity across the cover switch. If there is no continuity when the cover switch is on, replace the power source PWB (see page 1-5-7).
	3. Failure of improper controller unit installation.	Check that the cover open-close lever A turns on the cover switch when the front and rear covers are closed. If it won't turn on when covers are closed, re-seat the controller unit.

1-4-5 Mechanical problems

If the part causing the problem was not supplied, use the unit including the part for replacement.

Problem	Causes/check procedures	Corrective measures
(1) No paper feed.	Check if the surfaces of the paper feed pulley is dirty with paper powder.	Clean with isopropyl alcohol.
	Check if the paper feed pulley is deformed.	Check visually and replace any deformed (see page 2-4-5).
	Defective paper feed solenoid installation.	Check visually and remedy if necessary.
	Check if the surfaces of the lower registration roller and upper registration roller is dirty with paper powder.	Clean with isopropyl alcohol.
(2) Skewed paper feed.	The paper width guide is not placed correctly.	Place the paper width guide correctly (see page 1-2-5).
	Paper width guide in a cassette installed incorrectly.	Check the paper width guide visually and remedy or replace if necessary.
(3) Multiple sheets of paper are fed at one time.	Check if the paper is excessively curled.	Change the paper.
	Paper is loaded incorrectly.	Load the paper correctly.
	Check if the separation pad is worn.	Replace the separation pad if it is worn (see page 2-4-5).
(4) Paper jams.	Check if the paper is excessively curled.	Change the paper.
	Check if the contact between the lower and upper registration rollers is correct.	Check visually and remedy if necessary.
	Check if the heat roller or press roller is extremely dirty or deformed.	Check visually and replace the fuser unit (see page 1-5-6).
	Check if the contact between the duplex roller and duplex pulleys is correct. (25/26 ppm model only)	Check visually and remedy if necessary.
(5) Toner drops on the paper conveying path.	Check if the drum unit or developer unit is extremely dirty.	Clean the drum unit or developer unit.
(6) Abnormal noise is heard.	Check if the pulleys, rollers and gears operate smoothly.	Grease the bearings and gears.

1-4-6 Error Messages

If a problem has occurred in the printer, the indicators on the operation panel, the KYOCERA Net client, and the Status Monitor
will show the status of the printer. Problems that can be resolved by the user are described below.

Indicators
If the Attention indicator is lit or flashing, check the KYOCERA Net client.

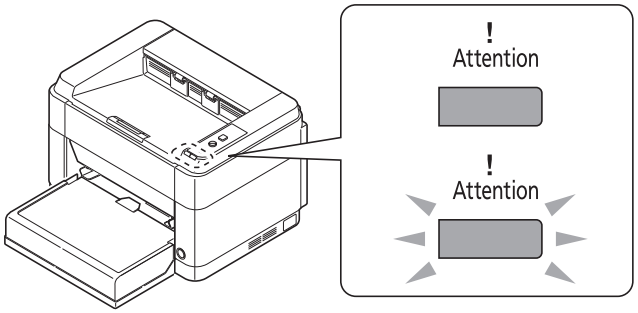

Figure 1-4-5

* : If the indicators light or flash repeatedly in manners not described above, a service error has probably occurred. Switch off the printer power switch, unplug the power cord, and then plug the power cord back in and switch on the power switch. This may clear the error.
If the error is not cleared, see page 1-4-4.

Message Displayed in KYOCERA Net client, and the Status Monitor	Meaning	Remedy
Add paper	There is no paper in the paper source.	Load paper into the paper source.
	The paper size and paper type settings selected at the time of printing are different from the KYOCERA Net client settings.	Check the paper size and paper type settings.
Add toner	The toner has run out.	Replace with a new toner container.
Adding toner	The printer is installing toner.	Please wait.
Cover open	The rear cover or front cover is open.	Close the rear cover or front cover.
Error has occurred	An error has occurred in the printer.	Check the printer.
	This message is displayed if the installed toner container's regional specification does not match the machine's.	Install the specified toner container.
Invalid driver	The printer connected to the current port is not supported by the printer driver.	Use a printer driver for this port that matches the printer.

Message Displayed in KYOCERA Net client, and the Status Monitor	Meaning	Remedy
Memory overflow	Unable to continue the job as the memory is used up.	Change the print resolution from Fast 1200 to 600 dpi. Refer to Printer Driver User Guide.
Non-genuine toner is installed	This message is displayed if the installed toner container is non-genuine.	When you want to use the toner container currently installed, press [Go] and [Cancel] simultaneously for 3 seconds or more.
No printing unit	The drum unit is either not installed or incorrectly inserted.	Insert the drum unit securely.
Paper jam	A paper jam has occurred.	When the jammed paper is removed and the rear cover is closed, the printer reverts to normal operation and resumes printing (see page 1-4-1).
Replacing the Maintenance Kit	Replacement of the maintenance kit is necessary at every 100,000 images of printing.	Replace Maintenance Kit.
Toner is running out.	The toner is running out.	Have a new toner container ready.
Top tray full	The top tray is full of paper.	The printer pauses after 150 sheets are printed. Remove paper from the top tray and press [GO] to begin printing.

This page is intentionally left blank.

1-5-1 Precautions for assembly and disassembly

(1) Precautions

Be sure to turn the power switch off and disconnect the power plug before starting disassembly.
When the fax kit is installed, be sure to disconnect the modular cable before starting disassembly.
When handling PWBs (printed wiring boards), do not touch parts with bare hands.
The PWBs are susceptible to static charge.
Do not touch any PWB containing ICs with bare hands or any object prone to static charge.
When removing the hook of the connector, be sure to release the hook.
Take care not to get the cables caught.
To reassemble the parts, use the original screws. If the types and the sizes of screws are not known, refer to the PARTS LIST.

(2) Drum

Note the following when handling or storing the drum.
When removing the drum unit, never expose the drum surface to strong direct light.
Keep the drum at an ambient temperature between -20°C/-4°F and 40°C/104°F and at a relative humidity not higher than 85% RH. Avoid abrupt changes in temperature and humidity.
Avoid exposure to any substance which is harmful to or may affect the quality of the drum.
Do not touch the drum surface with any object. Should it be touched by hands or stained with oil, clean it.

(3) Toner

Store the toner container in a cool, dark place.
Avoid direct light and high humidity.

(4) How to tell a genuine Kyocera Mita toner container

As a means of brand protection, the Kyocera Mita toner container utilizes an optical security technology to enable visual validation. A validation viewer is required to accomplish this.

Hold the validation viewer over the left side part of the brand protection seal on the toner container. Through each window of the validation viewer, the left side part of the seal should be seen as follows:

A black-colored band when seen through the left side window (●)

A shiny or gold-colored band when seen through the right side window (☼)

The above will reveal that the toner container is a genuine Kyocera Mita branded toner container, otherwise, it is a counterfeit.

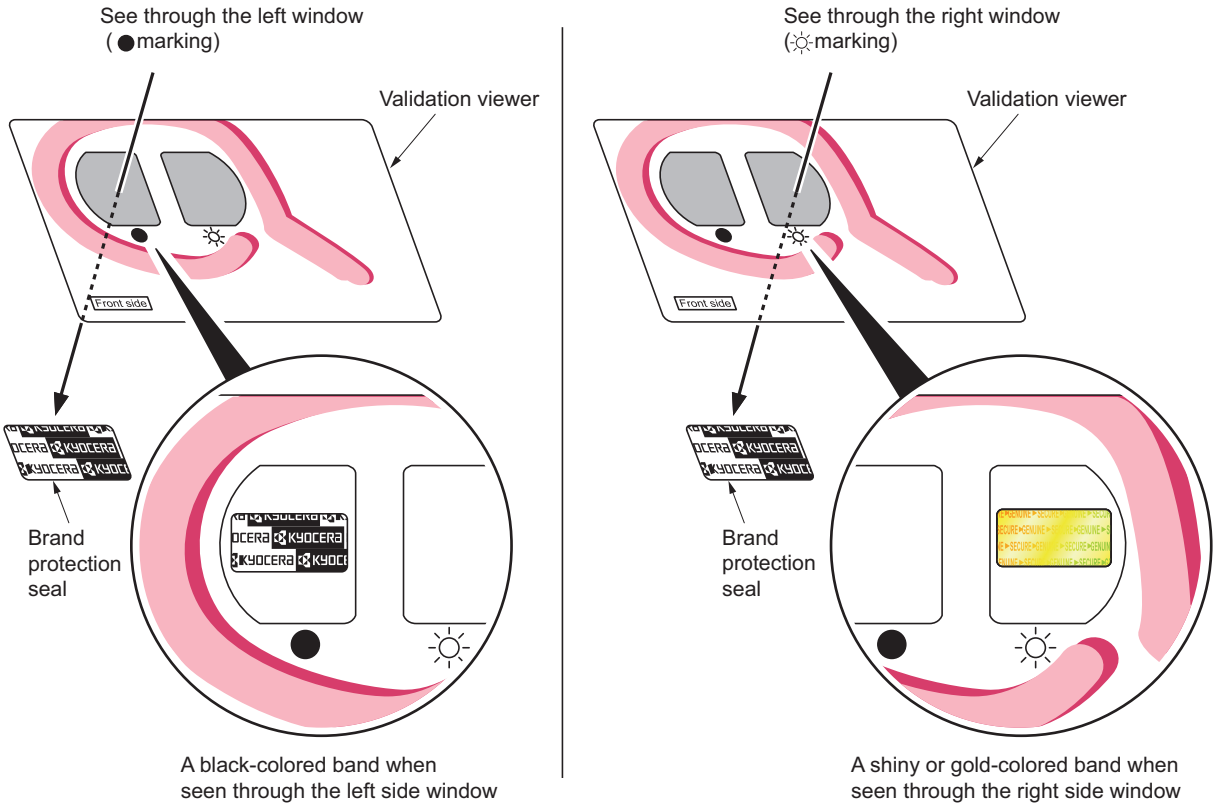

Figure 1-5-1

The brand protection seal has an incision as shown below to prohibit reuse.

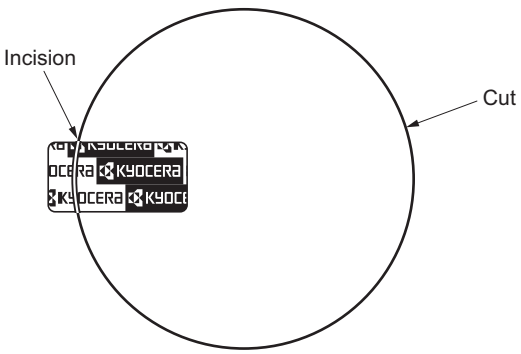

Figure 1-5-2

1-5-2 Outer covers

(1) Detaching and refitting the top cover

Procedure

1. Open the front cover and rear cover.
2. Remove two screws.

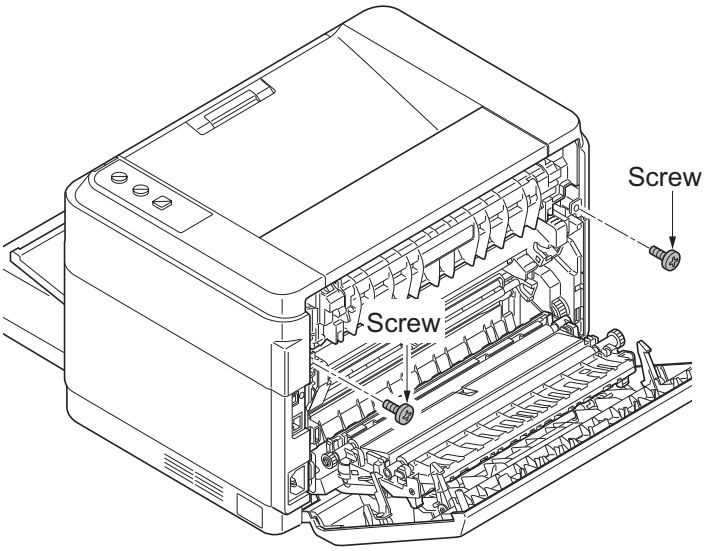

Figure 1-5-3

3. Unhook the two hooks and then remove the top cover.

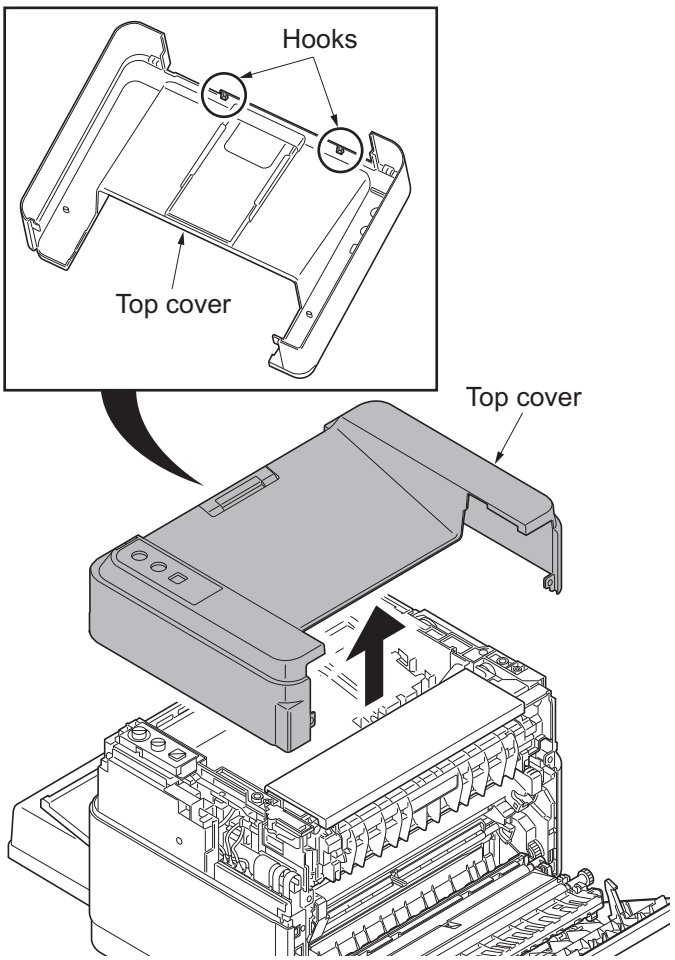

Figure 1-5-4

(2) Detaching and refitting the Right cover

Procedure

1. Remove the top cover (see page 1-5-3).
2. Unhook the five hooks and then remove the right cover.

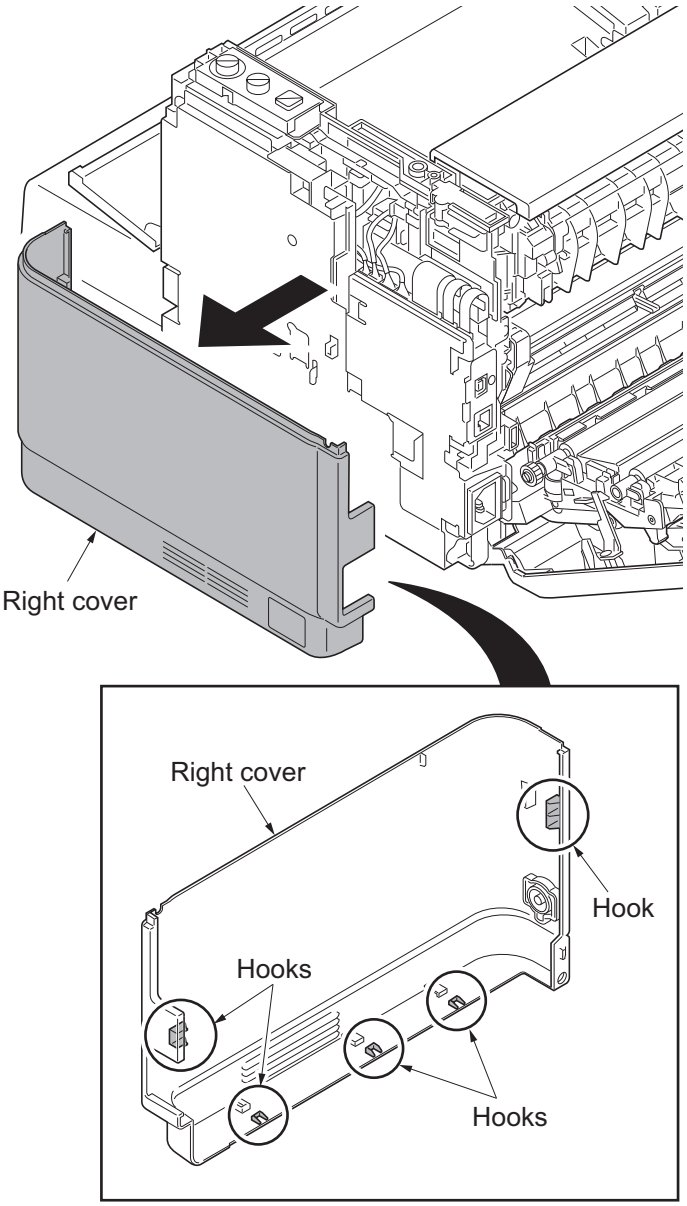

Figure 1-5-5

(3) Detaching and refitting the Left cover

Procedure

1. Remove the top cover (see page 1-5-3).
2. Unhook the five hooks and then remove the left cover.

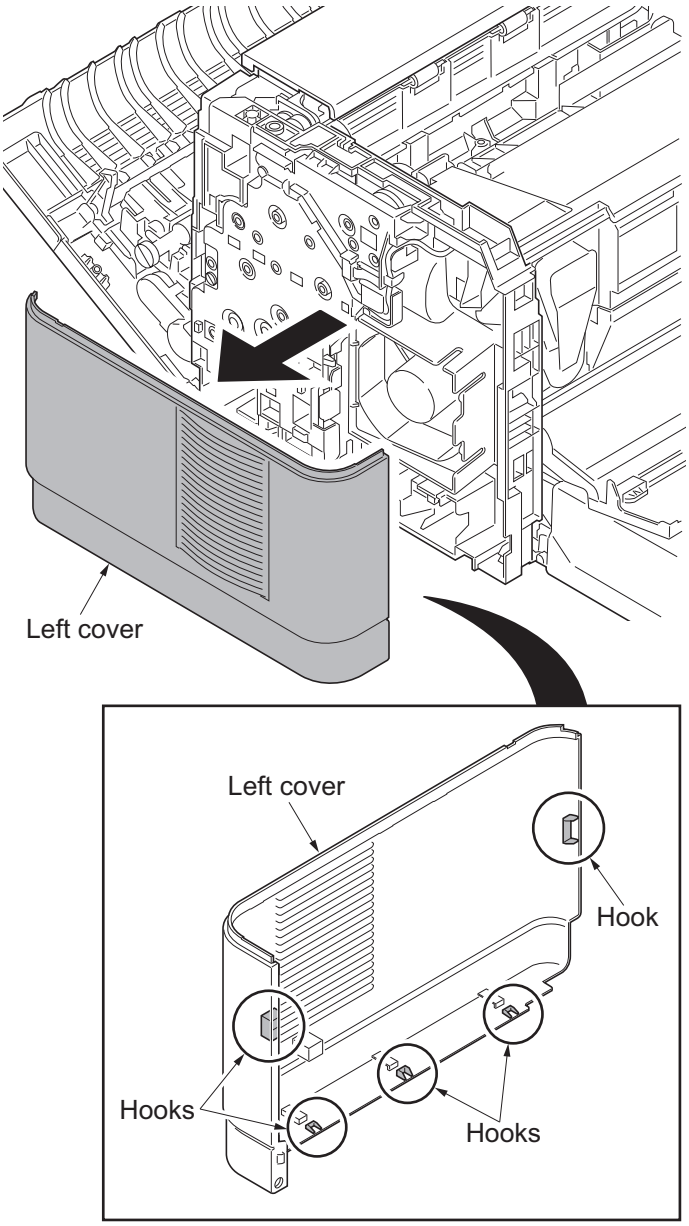

Figure 1-5-6

1-5-3 Fuser section

(1) Detaching and refitting the fuser unit

Procedure

1. Remove the top cover (see page 1-5-3).
2. Remove connector from the fuser heater.
   Remove two connectors from the main PWB.(25/26 ppm model only)

*: 20-ppm model has only one connector.

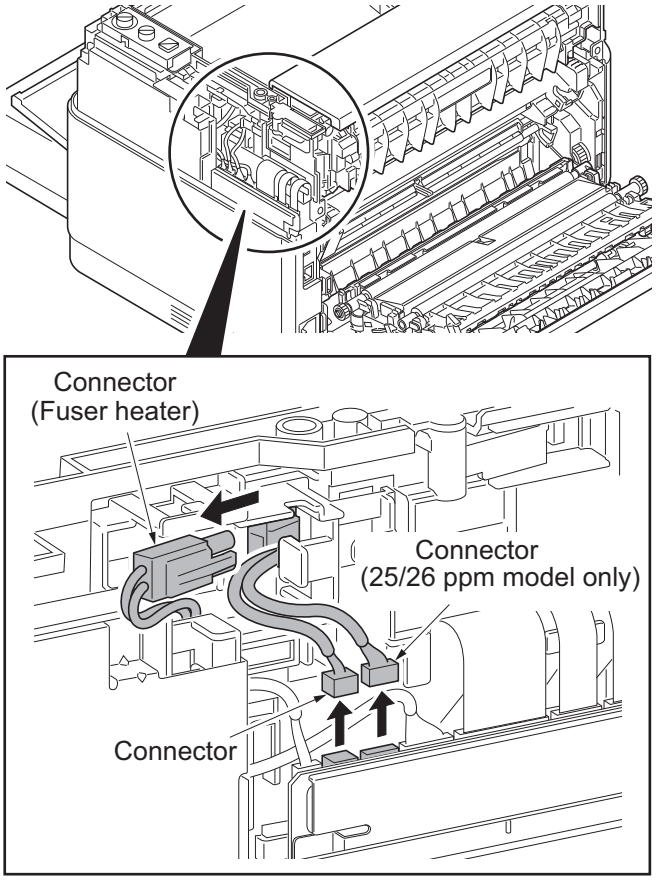

Figure 1-5-7

3. Remove two screws and then remove the fuser unit.
4. Check or replace the fuser unit and refit all the removed parts.
   Caution: Do not close the rear cover while the fuser unit is not installed, otherwise, the cover-open detecting lever may be damaged.

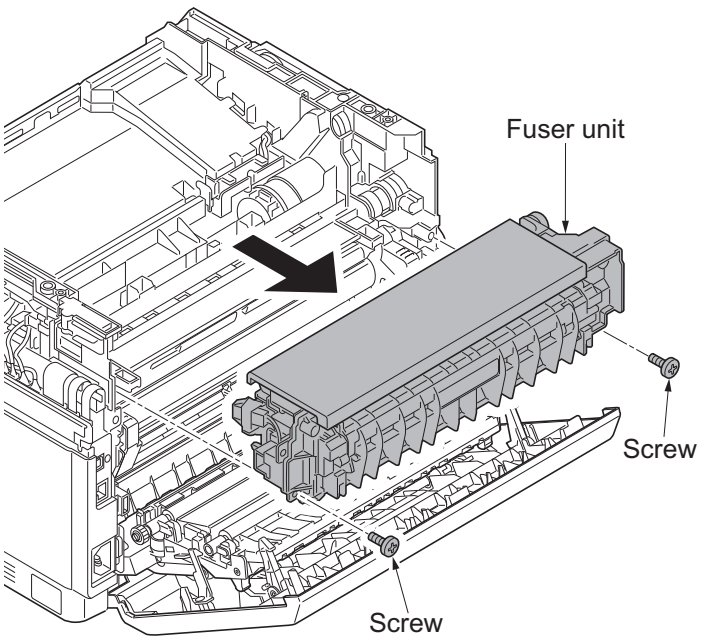

Figure 1-5-8

1-5-4 PWBs

(1) Detaching and refitting the main PWB,high voltage PWB and power source PWB

Procedure

1. Remove the top cover and right cover (see page 1-5-3,1-5-4).
2. Remove connector from the fuser heater.
   Remove the four connectors (25/26 ppm model only) and the three FFC connectors from the main PWB.

*: 20/21-ppm model has only three connector.

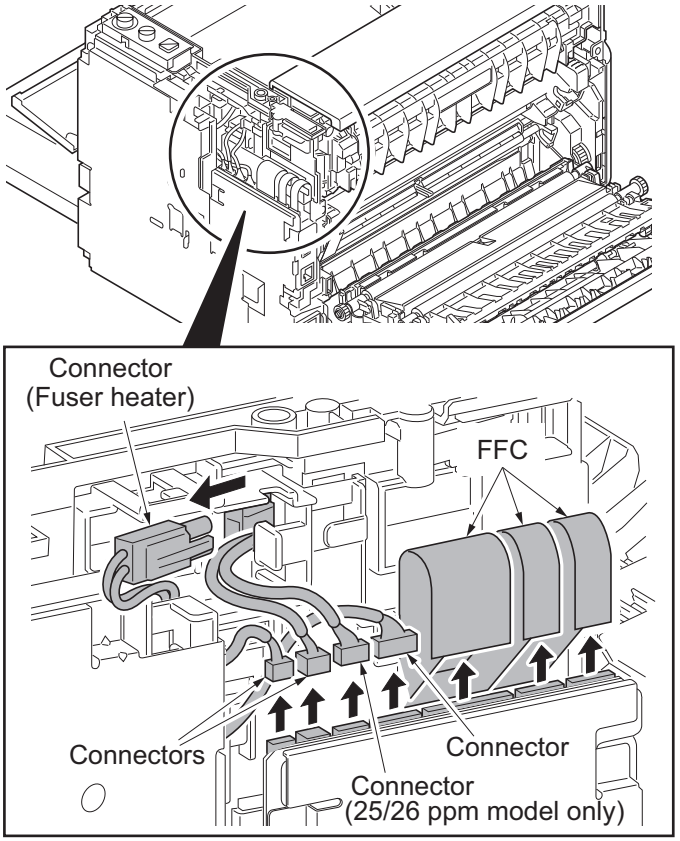

Figure 1-5-9

3. Remove five screws and then remove the control unit.

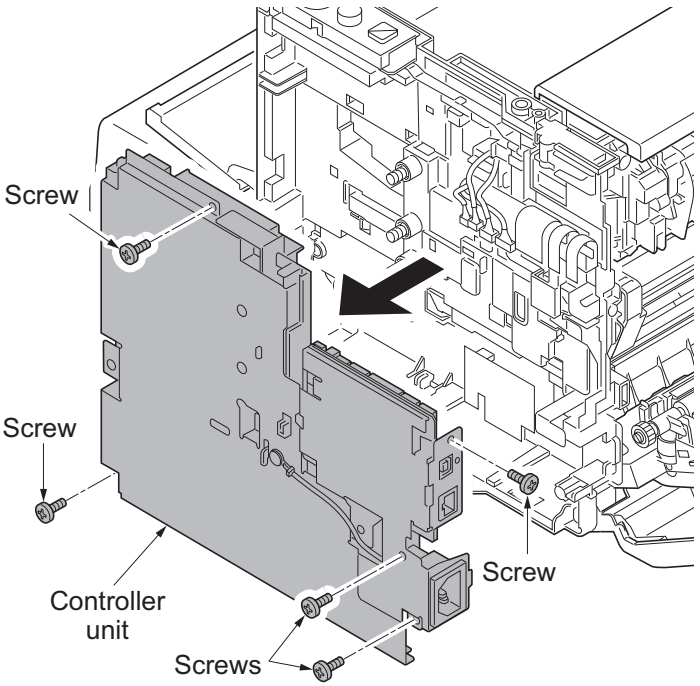

Figure 1-5-10

4. Remove the connector (CN1) that connected to the High voltage PWB.
5. Remove the two connectors (YC12,YC13) that connected to the main PWB.
6. Remove the three connectors (YC101,YC102,YC103) that connected to the power source PWB.

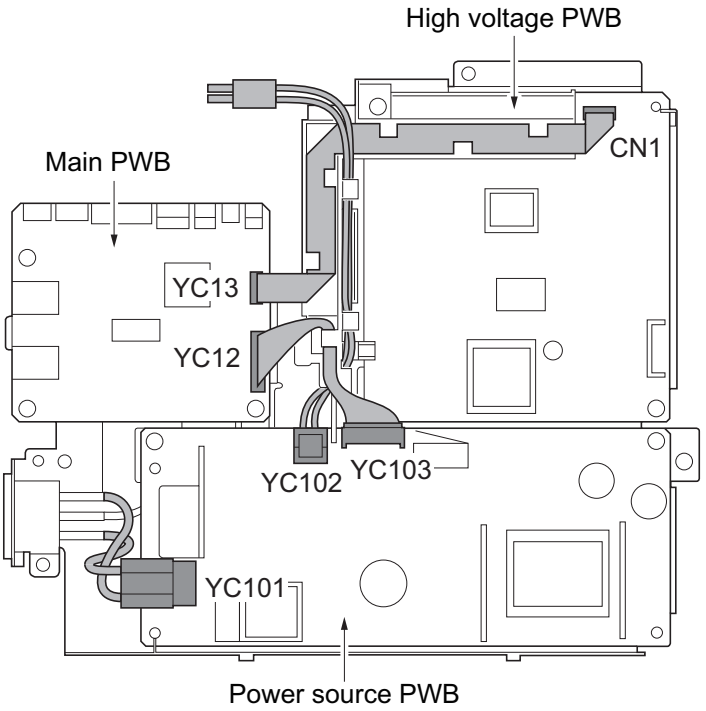

Figure 1-5-11

7. Remove screw and then remove the Cable holder.

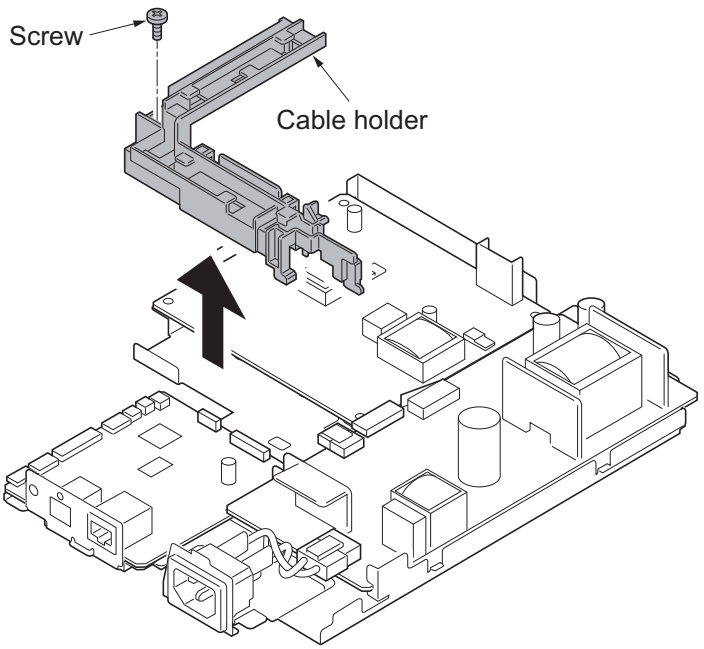

Figure 1-5-12

8. Remove five screws and then remove the main PWB.

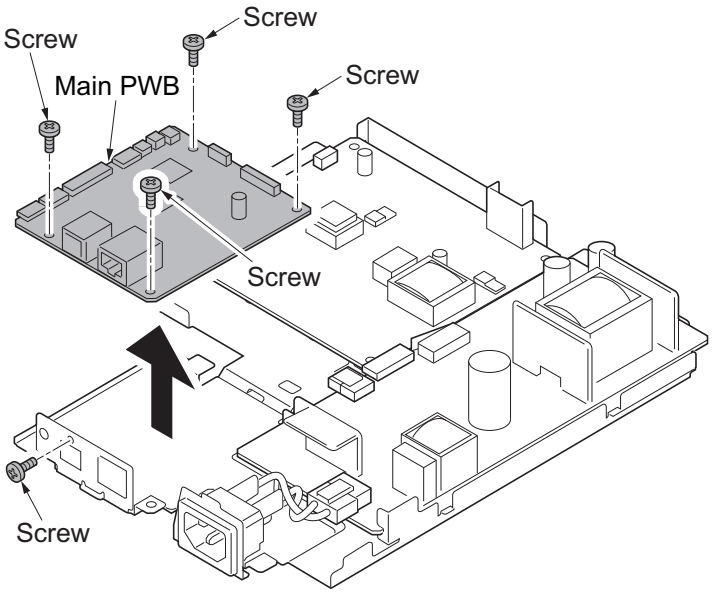

Figure 1-5-13

9. Remove screw and then remove the high voltage PWB.

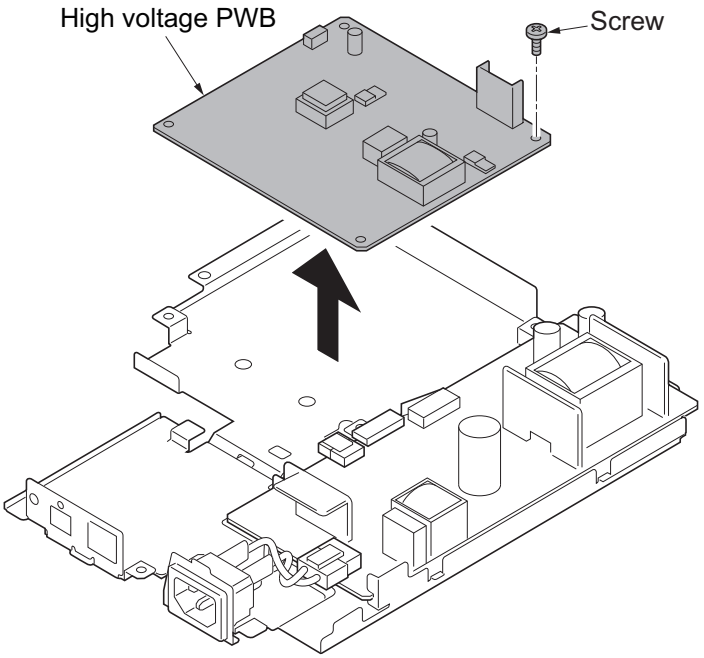

Figure 1-5-14

1. Remove two screws and then remove the power source PWB.
2. Check or replace the main PWB,high voltage PWB and power source PWB, and refit all the removed parts.

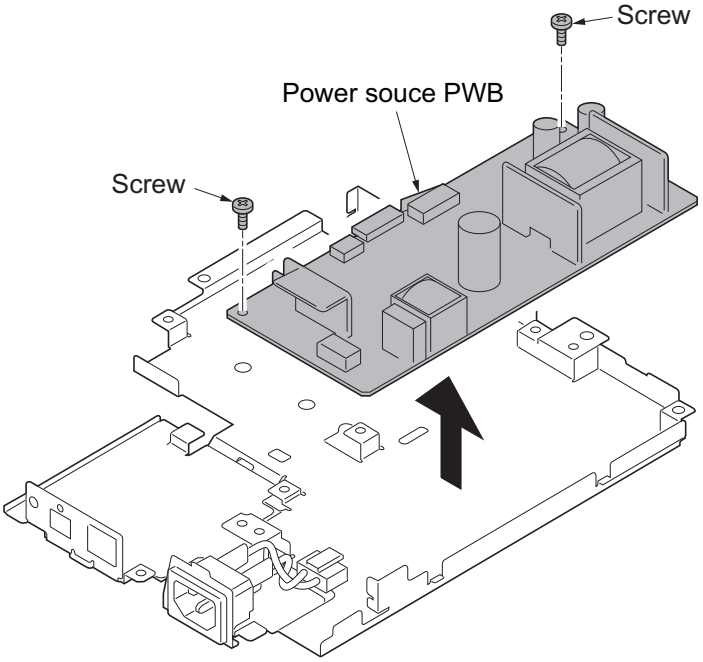

Figure 1-5-15

Caution: When fitting the controller unit, make sure that the cover-open lever is seated above the switch actuator so that the lever can turn on the cover switch above the power PWB.
When performing service, be sure to keep the front and rear covers opened.
When installing the unit, be sure to open the front and rear cover.

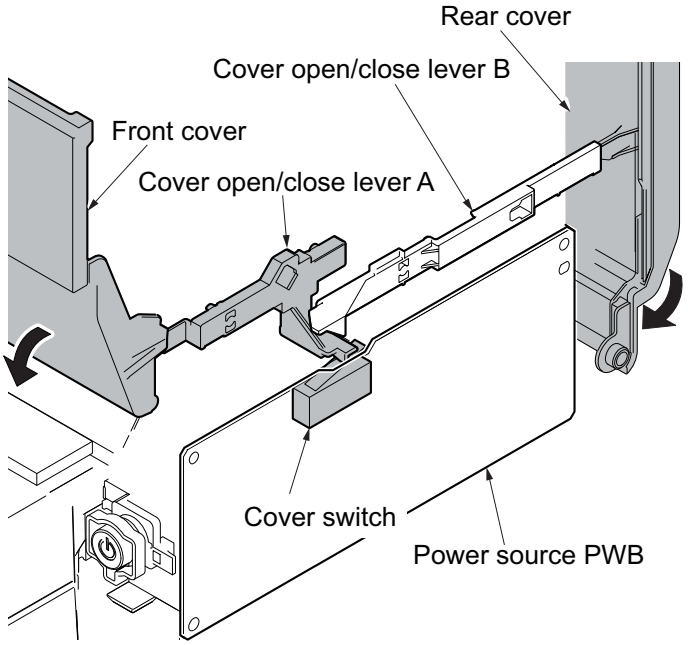

Figure 1-5-16

(2) Detaching and refitting the operation panel PWB

Procedure

1. Remove the control unit (see page 1-5-7).
2. Unhook the two hooks and then remove the operation panel unit.

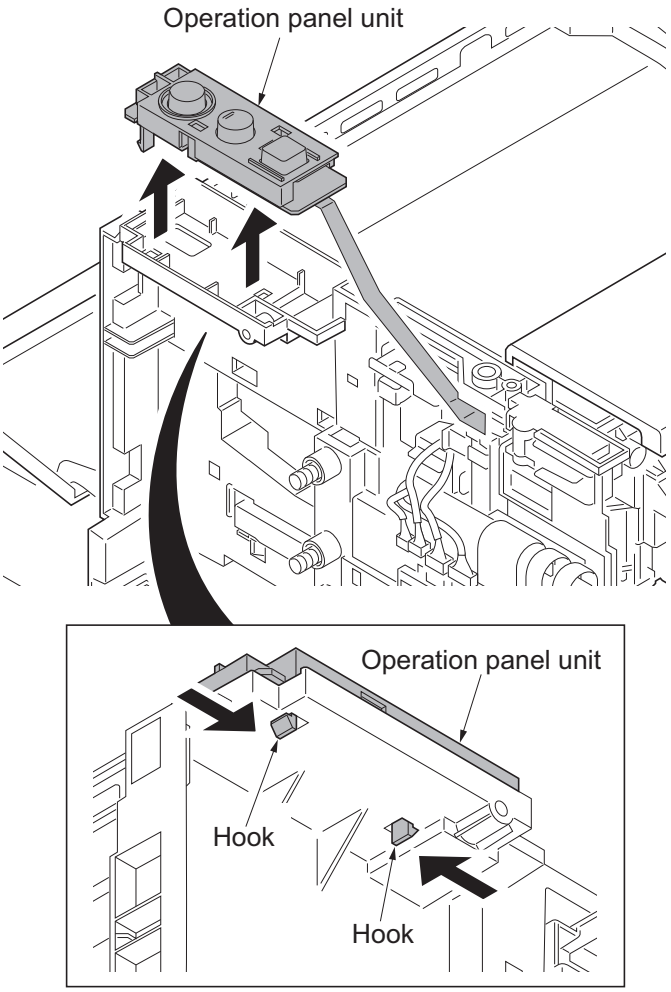

Figure 1-5-17

3. Unhook the two hooks and then remove the operation panel PWB.
4. Check or replace the operation panel PWB and refit all the removed parts.

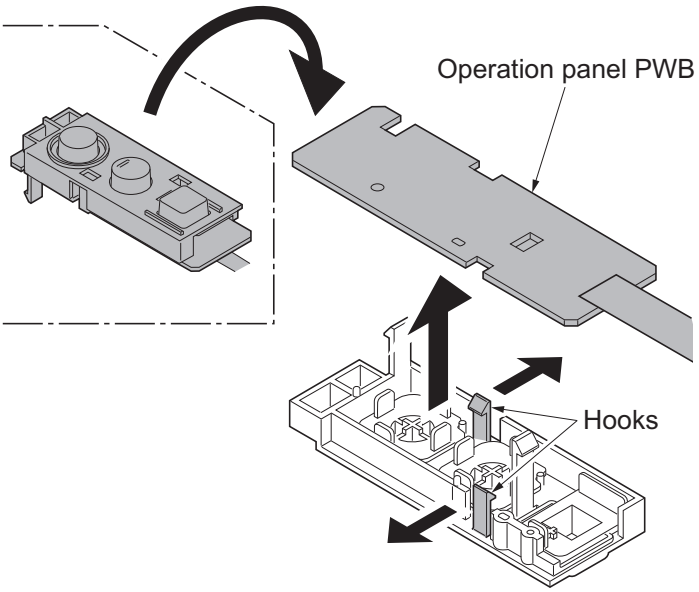

Figure 1-5-18

1-5-5 Others

(1) Detaching and refitting the laser scanner unit

Procedure

1. Remove the top cover (see page 1-5-3).
2. Remove the connectors and the FFC from the main PWB.

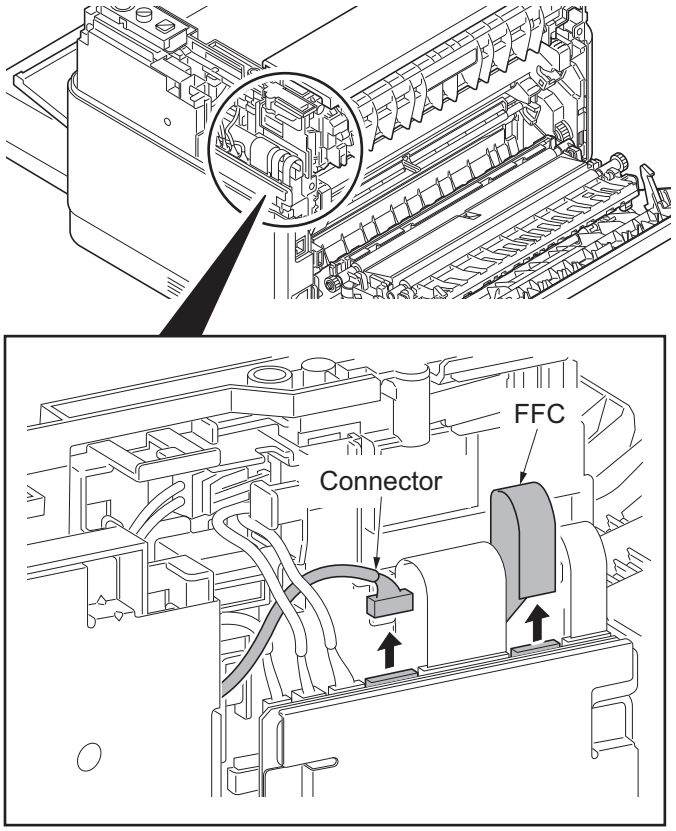

Figure 1-5-19

3. Unhook the four hooks and then remove the upper LSU cover.

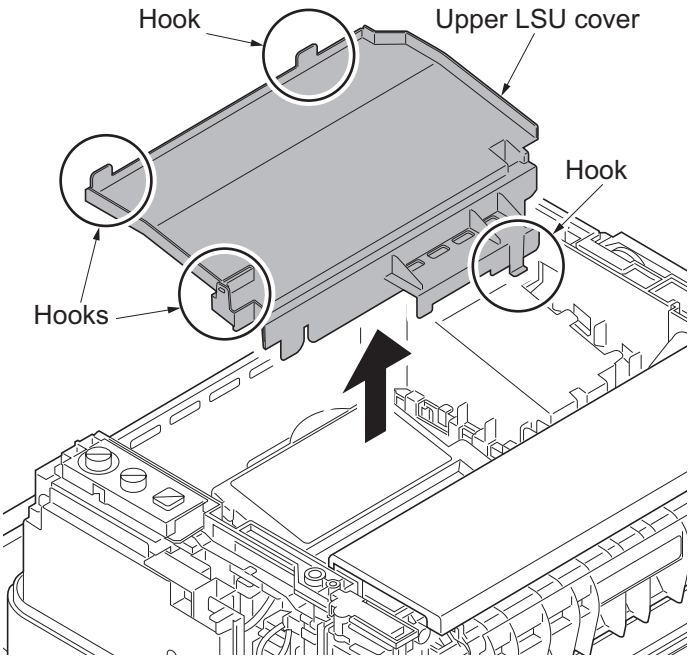

Figure 1-5-20

4. Remove the Drum unit (see page 2-4-4).
5. Confirm that the laser shutter has closed.

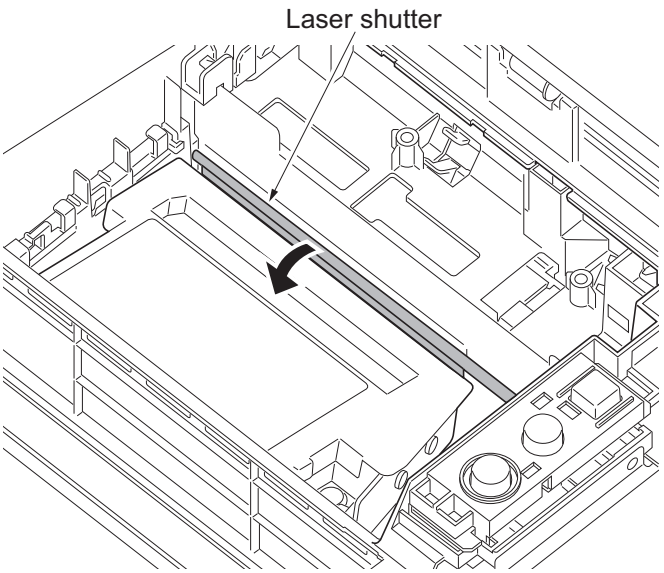

Figure 1-5-21

6. Remove four screws and then remove the laser scanner unit.
7. Check or replace the laser scanner unit and refit all the removed parts.

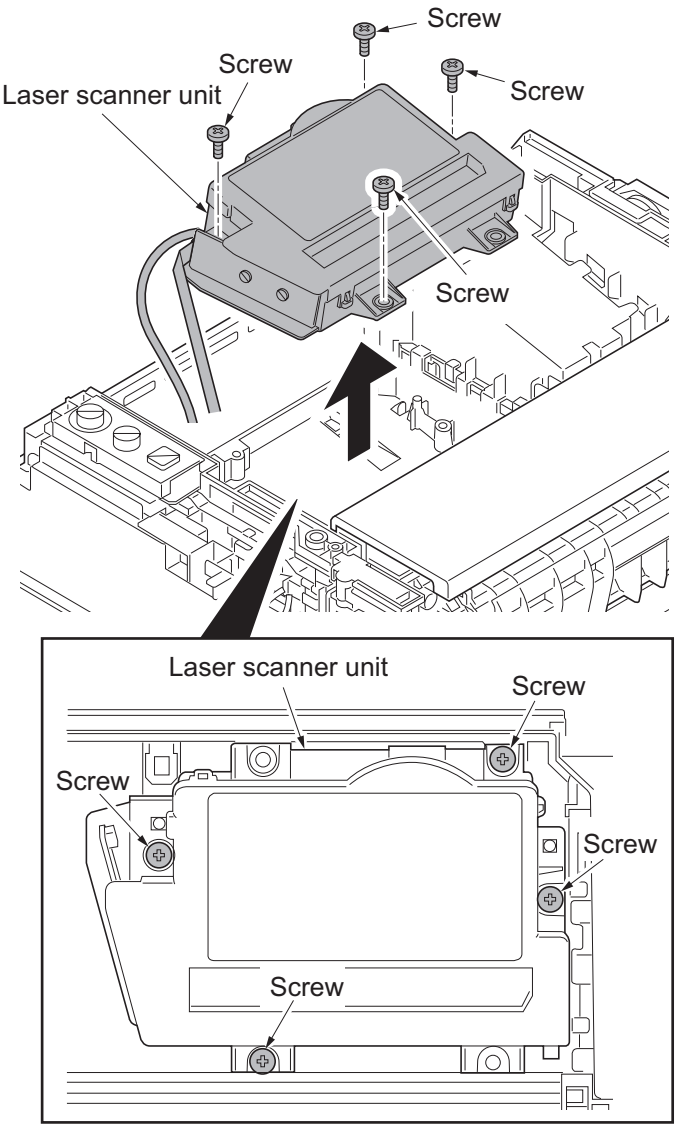

Figure 1-5-22

(2) Detaching and refitting the Main motor unit

Procedure

1. Remove the top cover and left cover (see page 1-5-3,1-5-5).
2. Remove the two screws and pull out the fuser unit halfway out.

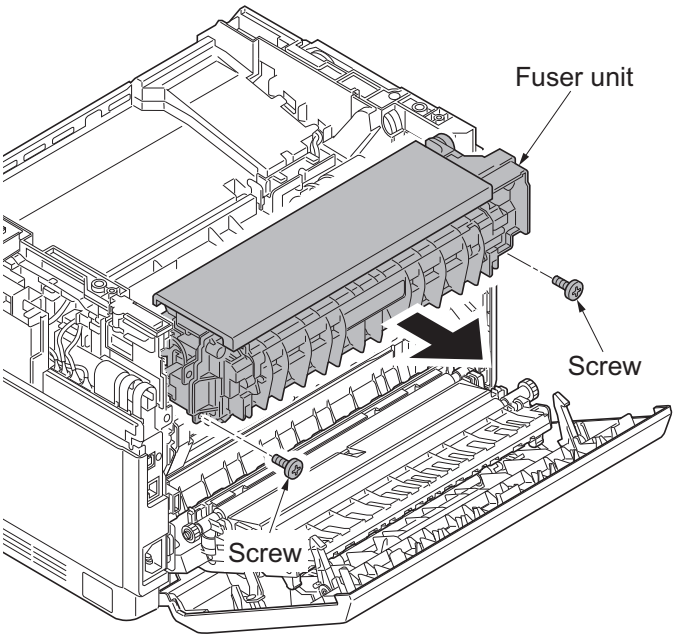

Figure 1-5-23

3. Unhook the four hooks and then remove the upper LSU cover.

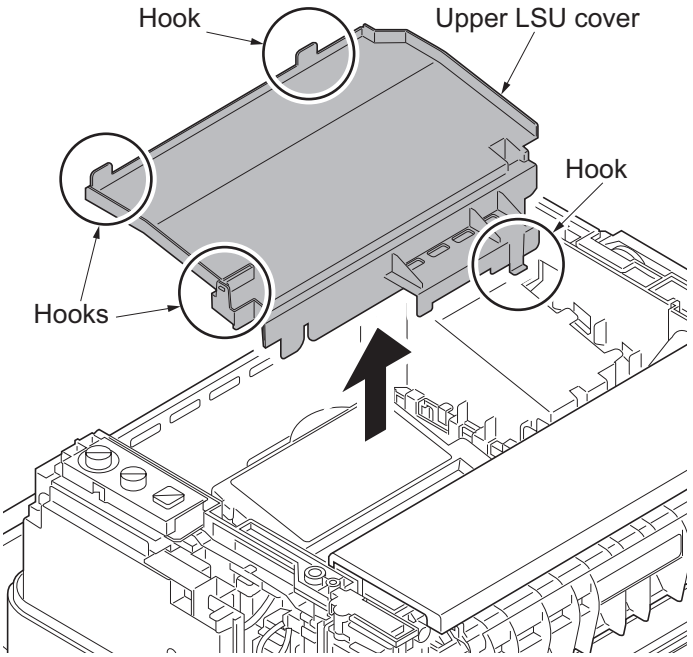

Figure 1-5-24

4. Remove main motor connector from the Relay PWB.

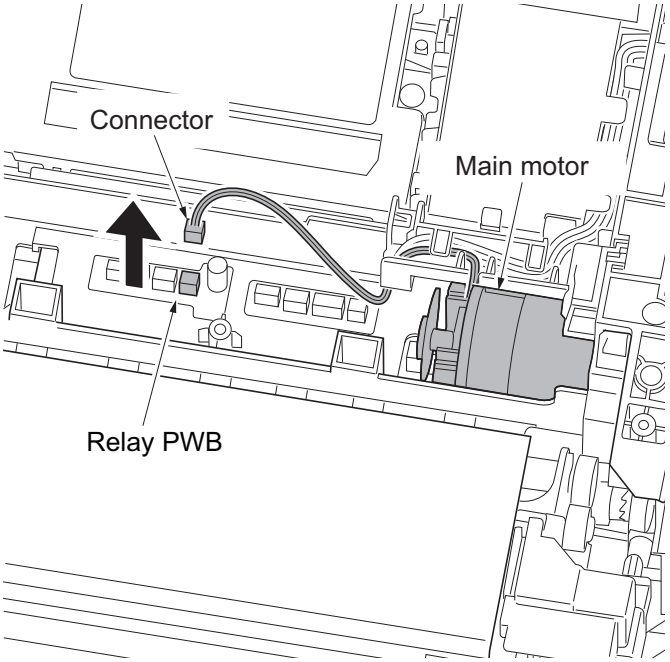

Figure 1-5-25

5. Detach the connector from the paper feed solenoid and unhook the harness from the guide.
6. Detach the connector from the duplex solenoid and unhook the harness from the guide(25/26 ppm model only).
7. Detach the spring.

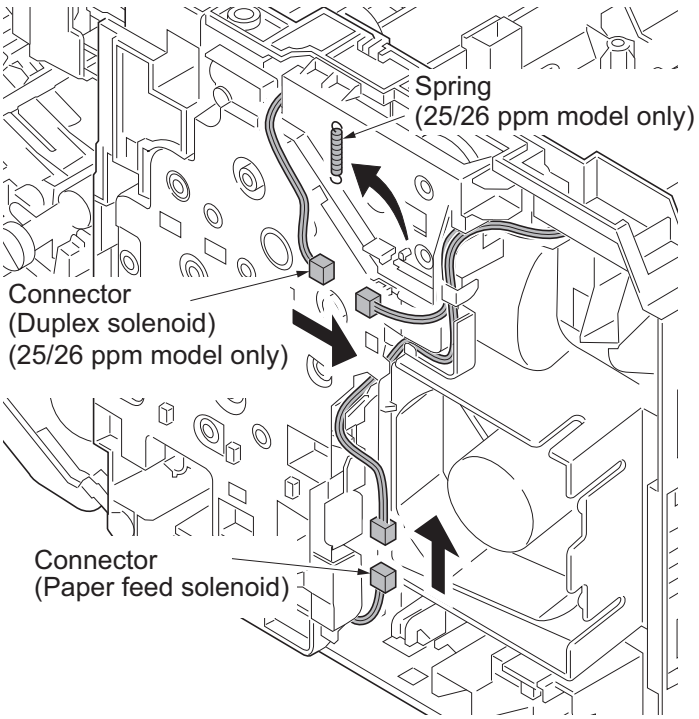

Figure 1-5-26

8. Remove four screws and then remove the drive cover.

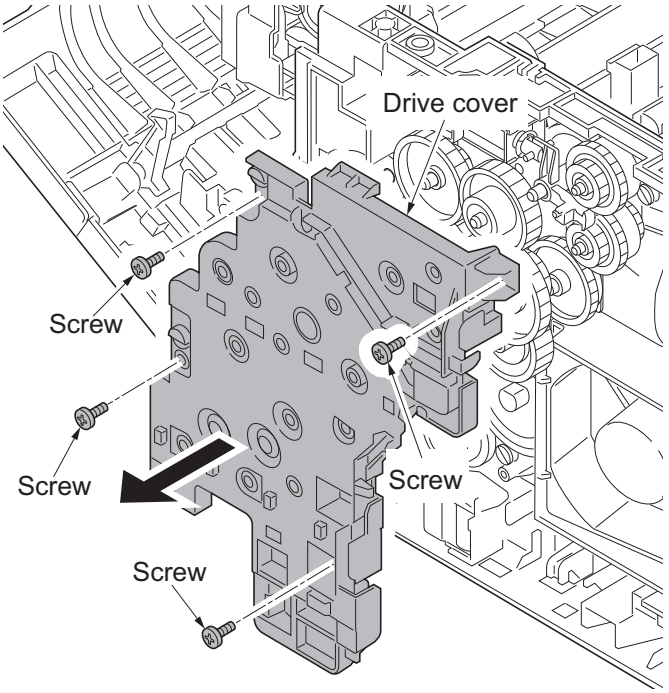

Figure 1-5-27

9. Remove the gear A,gear B,gear C,gear D and gear E.

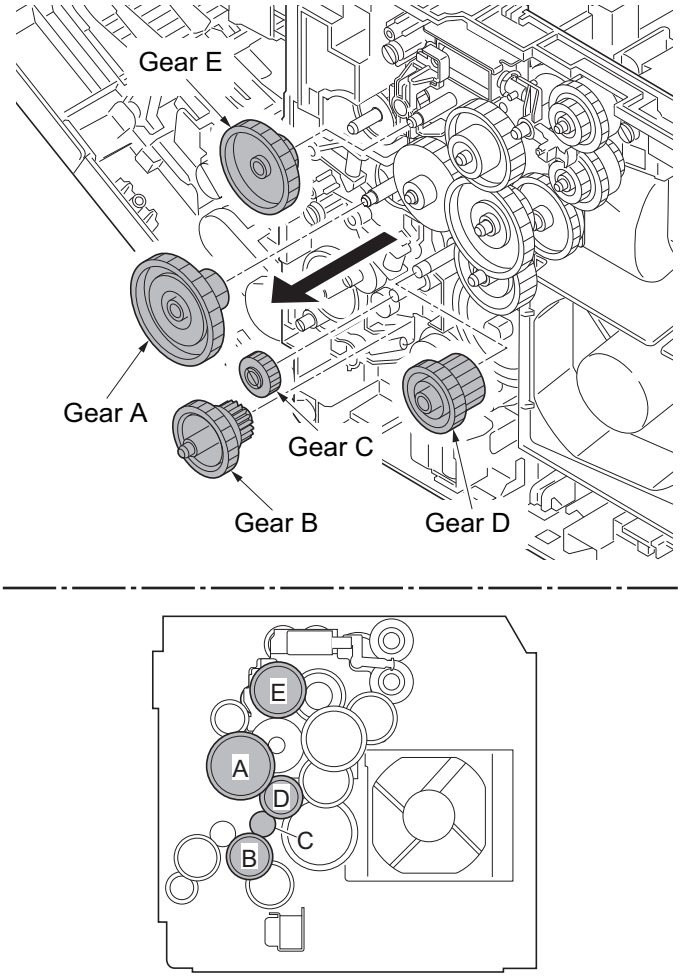

Figure 1-5-28

10. Remove the gear F,gear G,gear H and gear I.

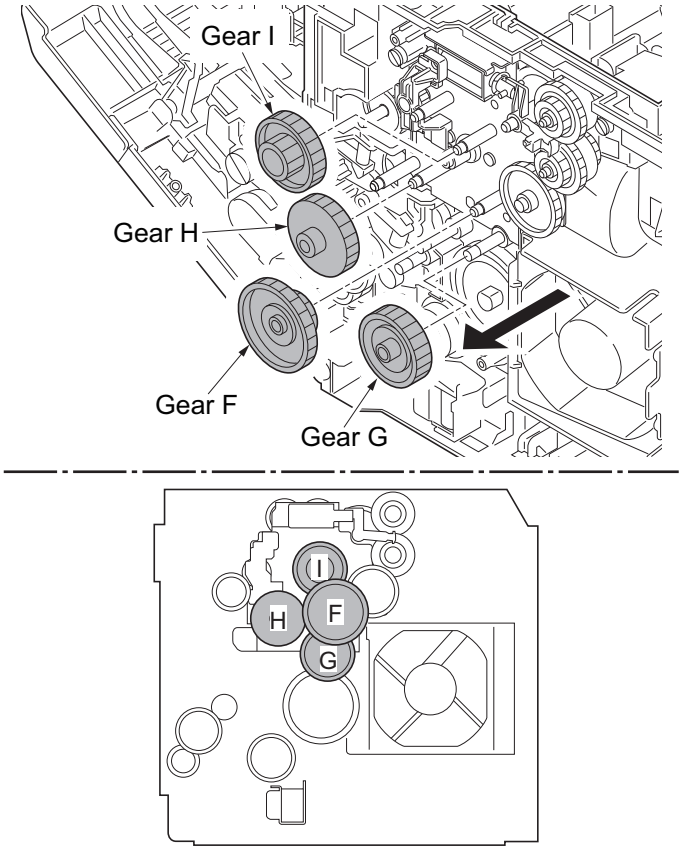

Figure 1-5-29

11. Remove the gear J,gear K and gear L (25/26 ppm model only).

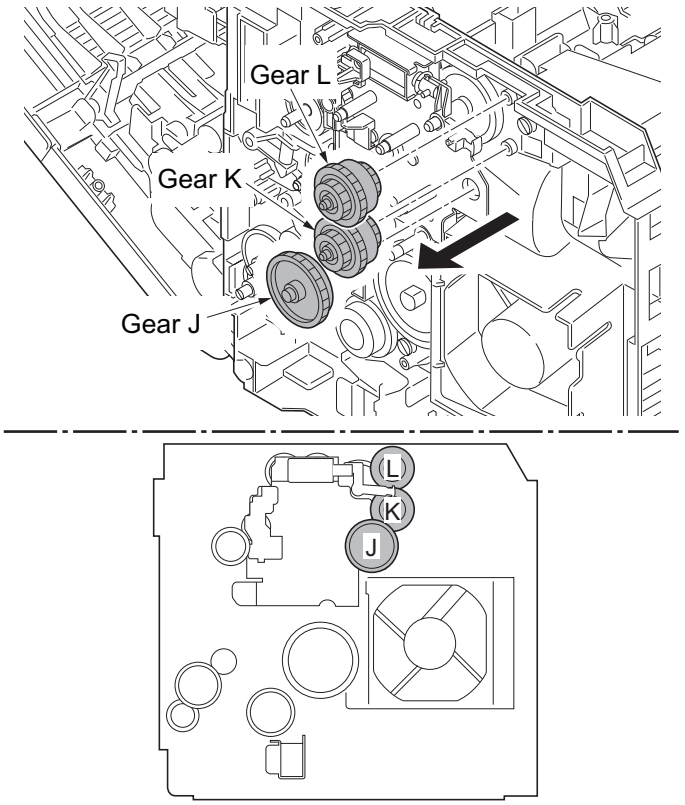

Figure 1-5-30

12. Remove the spring,gear M,gear N and sim.

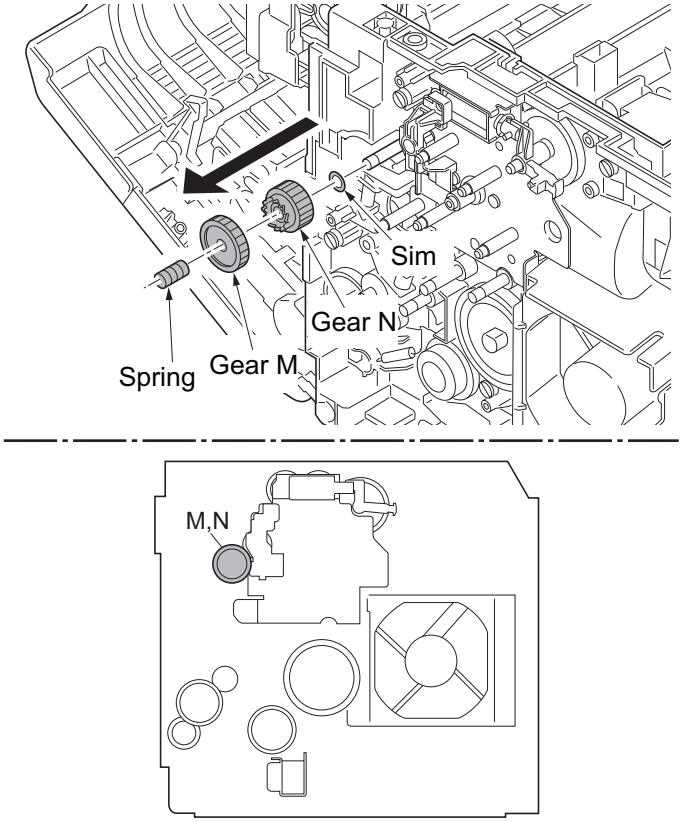

Figure 1-5-31

13. Remove the three screws and remove the gear cover and gear P.

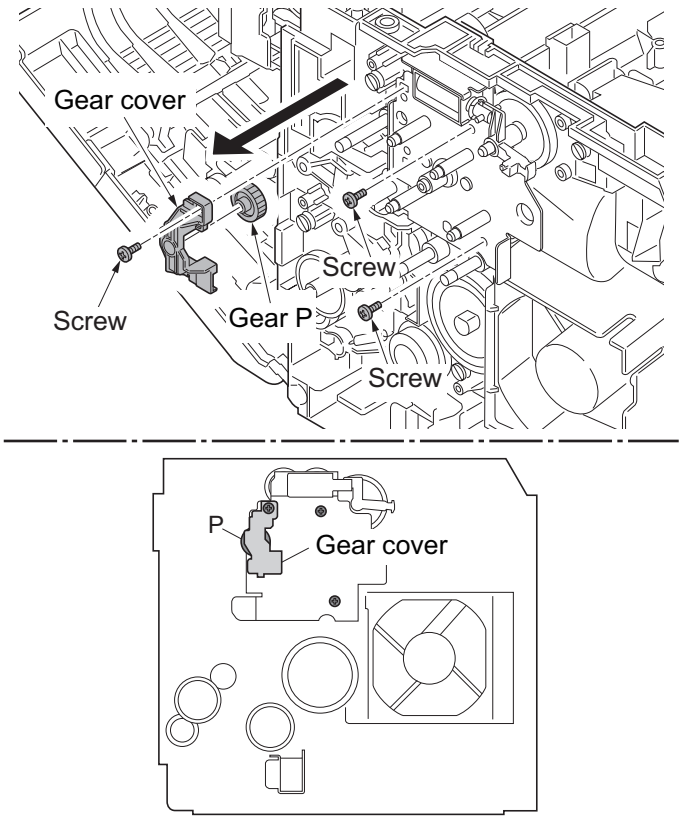

Figure 1-5-32

14. Remove the main motor unit so that the pulse board will not hit the sensor.

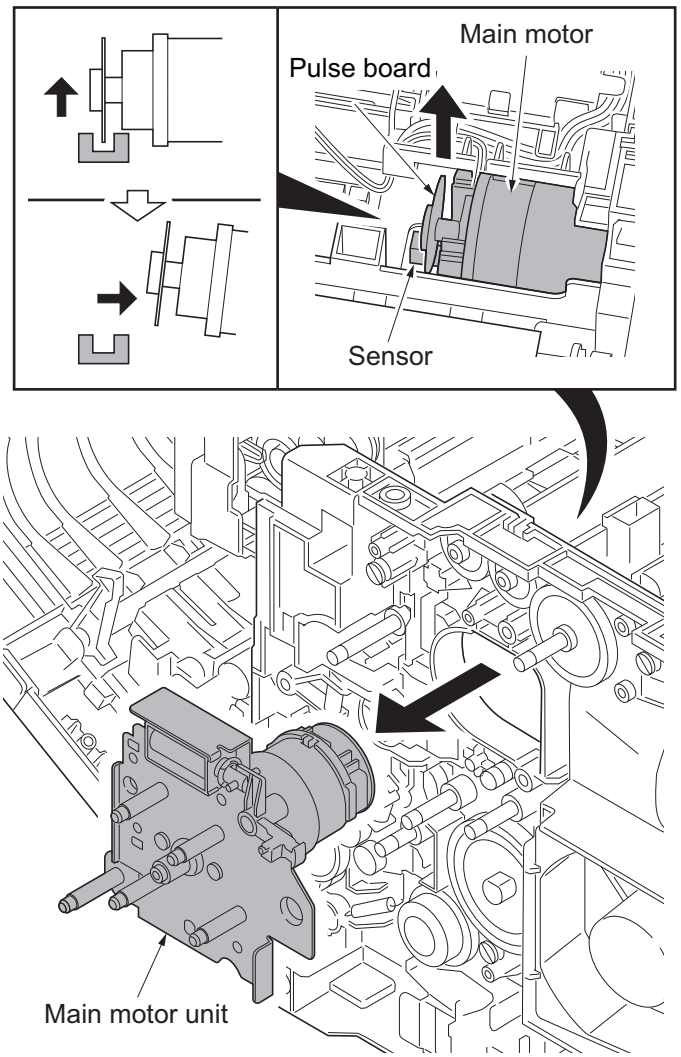

Figure 1-5-33

15. Remove a screw and remove the duplex solenoid from the main motor unit (25/26 ppm model only).
    *: To fit the main motor unit to the machine, make sure not to let the pulse board hit the sensor.

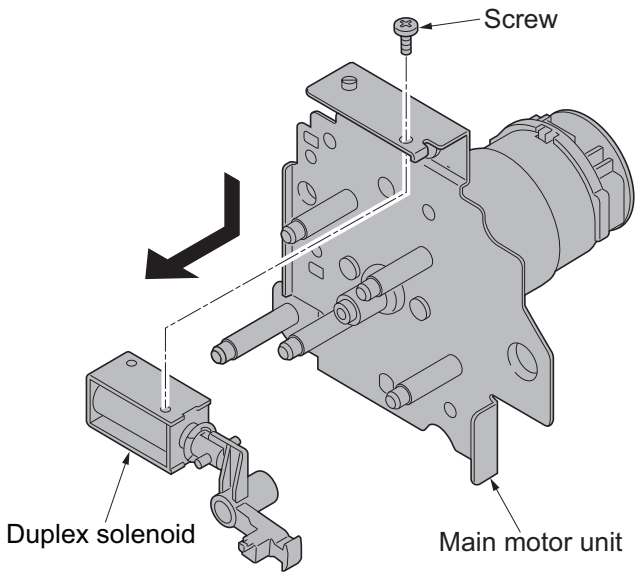

Figure 1-5-34

(3) Direction of installing the principal fan motor

When detaching or refitting the fan motors, be careful of the airflow direction (intake or exhaust).

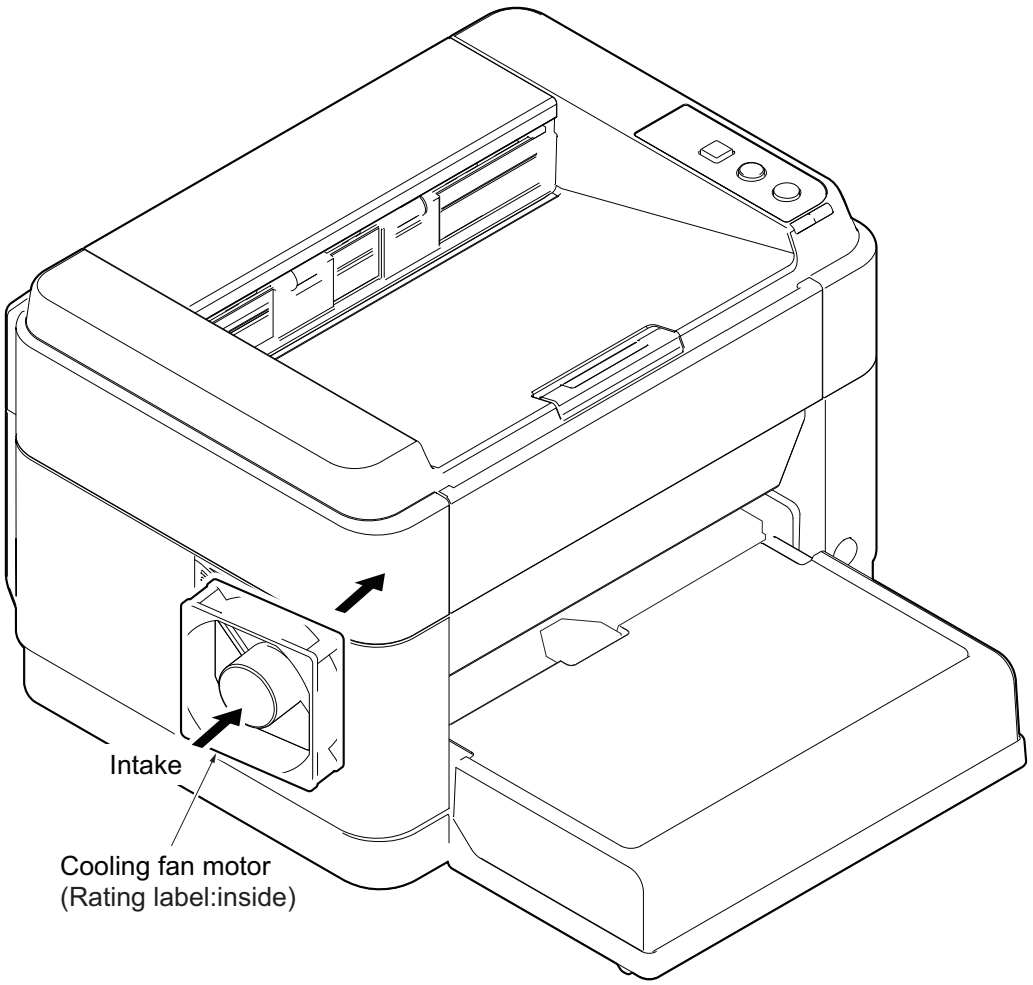

Figure 1-5-35

2-1-1 Paper feed/conveying section

Paper feed/conveying section consists of the paper feed unit that feeds paper from the cassette and the MF tray (Manual feed tray) paper feed unit that feeds paper from the MF tray(25/26 ppm model), and the paper conveying section that conveys the fed paper to the transfer/separation section.

(1) Cassette paper feed /paper conveying section

Cassette paper feed section consists of the paper holder with the cassette operation plate, and the paper feed pulley and the separation pad, for extracting and conveying the paper. Paper is fed out of the cassette by the rotation of the paper feed pulley.
The paper conveying section conveys paper to the transfer/separation section as paper feeding from the cassette or MF tray, or as paper refeeding for duplex printing (25/26 ppm model). Paper by feeding is conveyed by the upper registration roller and lower registration roller to the transfer/separation section.The timing to start image formatting by laser is triggered by the regist sensor (RS) and in synchronization with the paper.

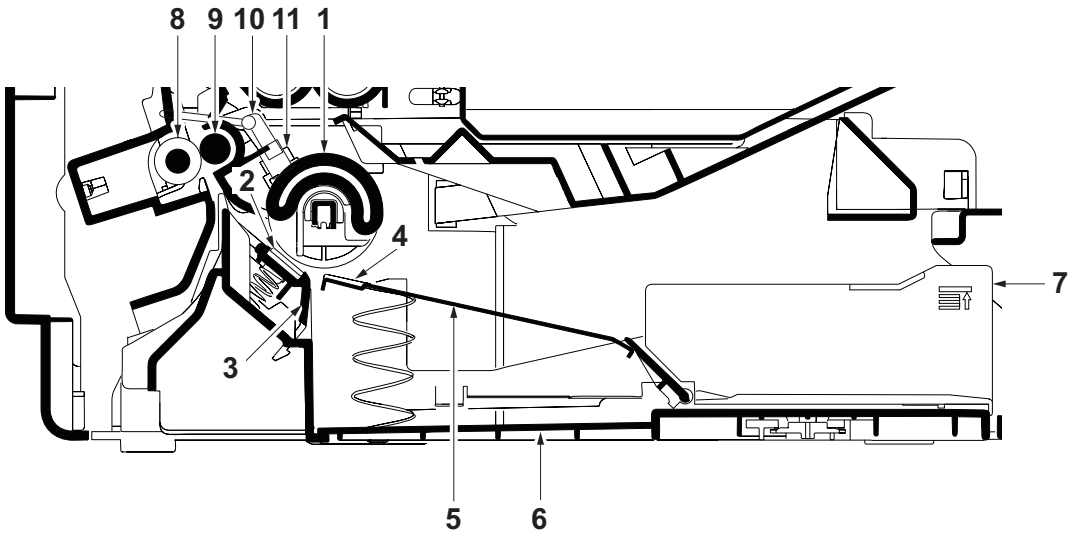

Figure 2-1-1 Cassette paper feed section

1. Paper feed pulley
2. Separation pad
3. Separation pad holder
4. Cassette operation plate
5. Bottom pad
6. Cassette base
7. Guide R/F
8. Lower registration roller
9. Upper registration roller
10. Actuator (regist deflection sensor)
11. Registration sensor (RS)

(2) Manual feed section(25/26 ppm model only)

Manual feed section consists of the MF sheet, MF base and the paper feed pulley (same as the cassette) for extracting and conveying the paper.
Paper is fed out of the MF tray by the rotation of the paper feed pulley.Paper is automatically fed from the manual feed tray if paper is present in the tray.

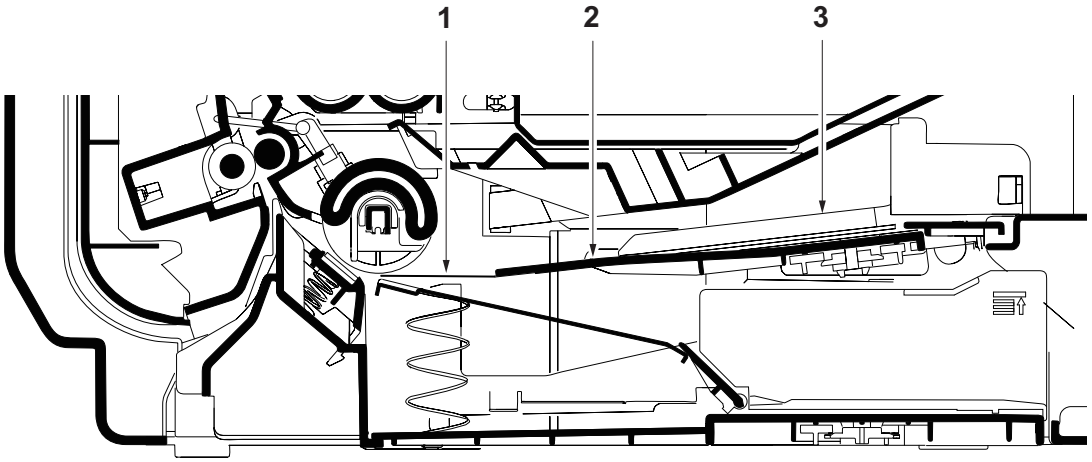

Figure 2-1-2 Manual feed section

1. MF sheet
2. MF base
3. MF guide R/L

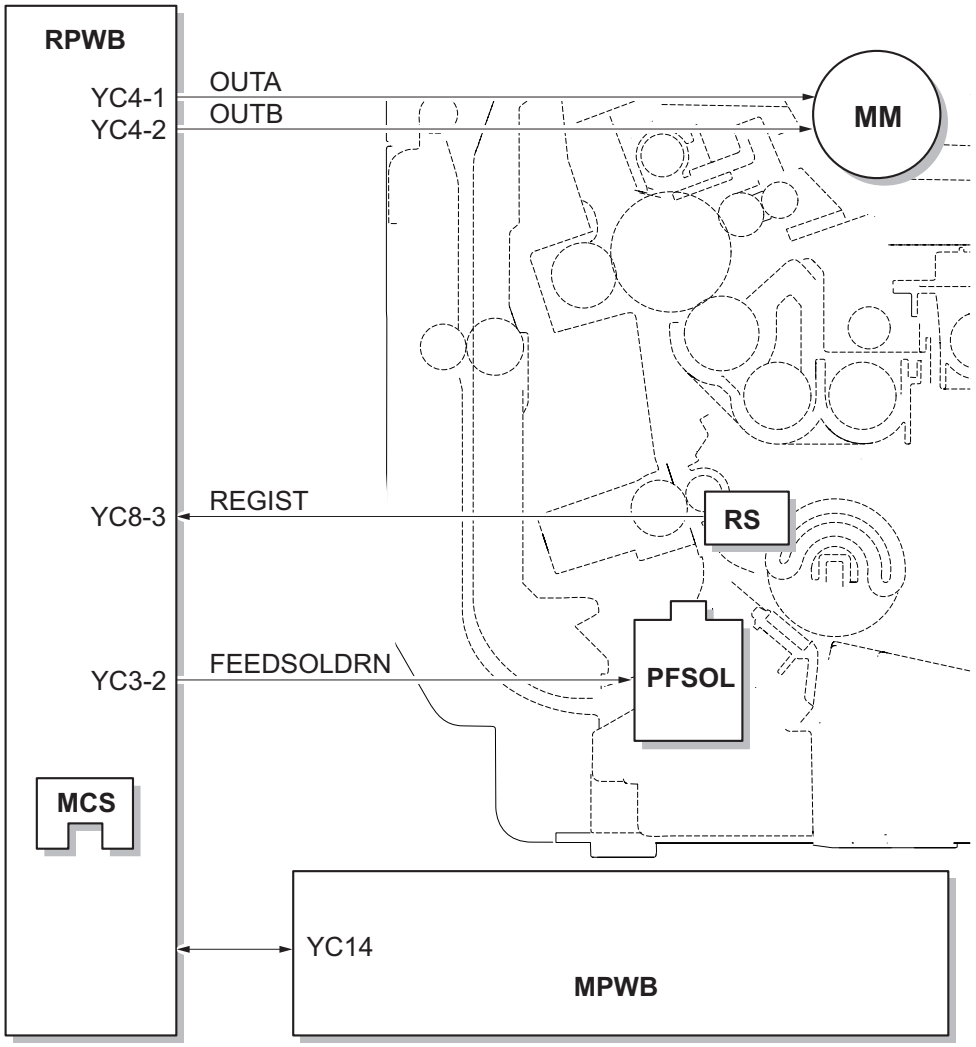

Figure 2-1-3 Cassette paper feed section block diagram

2-1-2 Drum section

The drum section consists of the charger roller, drum and cleaning section. The drum is electrically charged uniformly by means of a charger roller to form a latent image on the surface. The cleaning section consists of the cleaning blade and the drum screw which remove residual toner from the drum surface after transfer. The eraser lamp (ELPWB) consists of LEDs and removes residual charge on the drum before main charging.

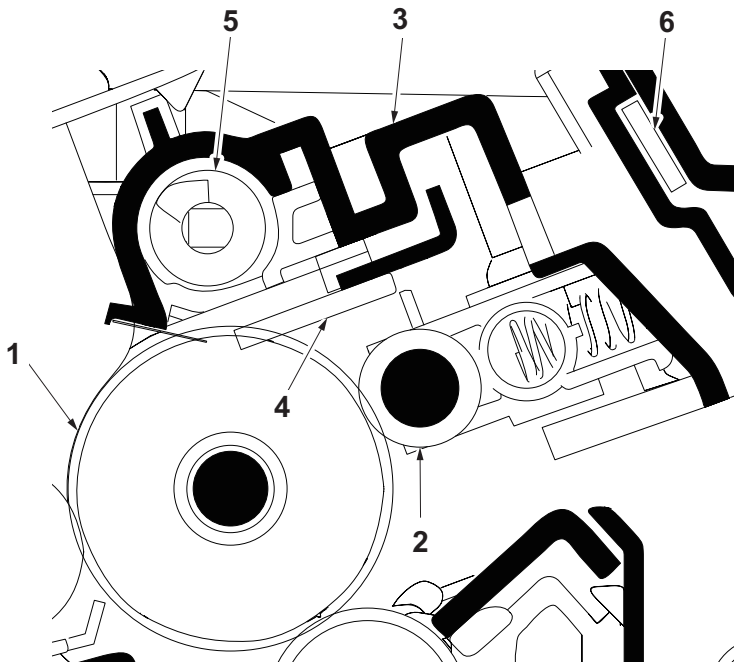

Figure 2-1-4 Drum section

1. Drum
2. Charger roller
3. Drum frame
4. Cleaning blade
5. Drum screw
6. Eraser lamp (ELPWB)

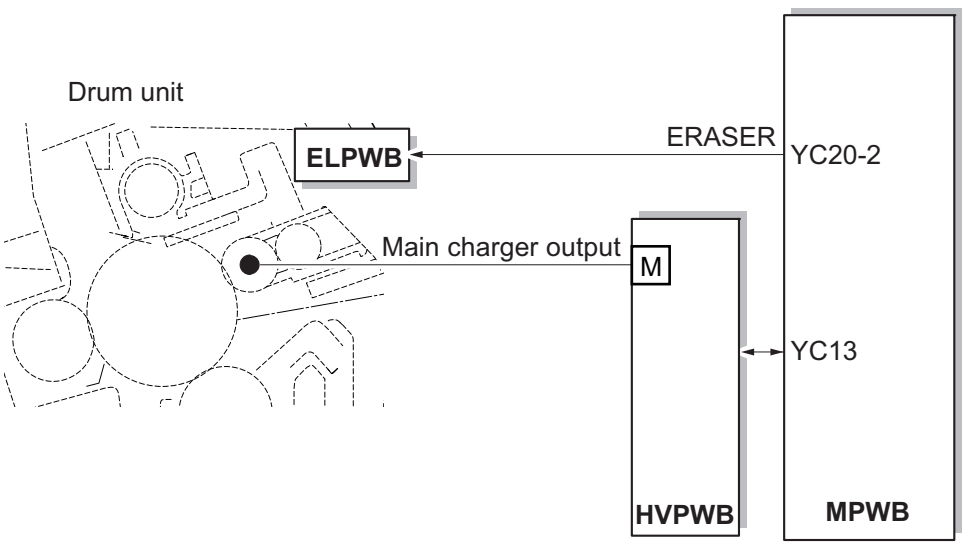

Figure 2-1-5 Drum section block diagram

2-1-3 Developer section

The developer unit consists of the sleeve roller that forms the magnetic brush, the magnet roller, the developer blade and the developer screws that agitate the toner. Also, the toner sensor (TS) checks whether or not toner remains in the toner container.

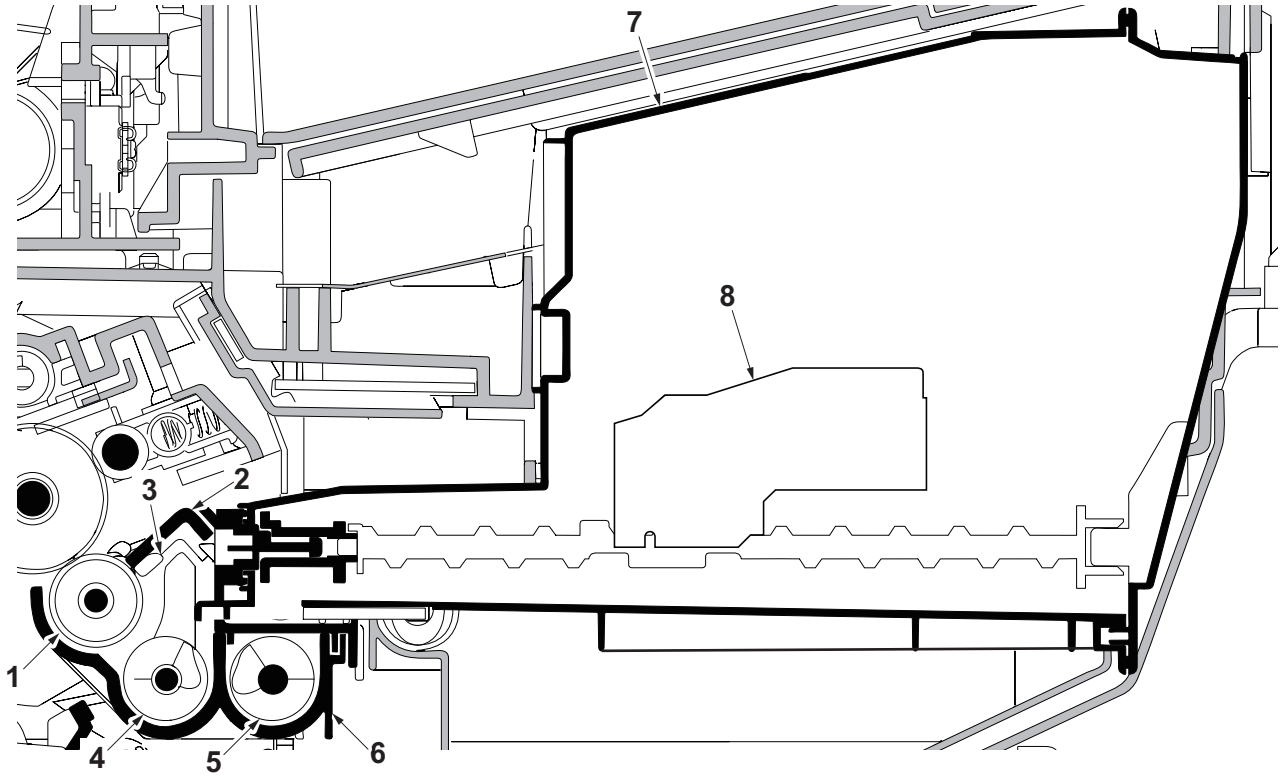

Figure 2-1-6 Developer section

1. Developer roller
2. Developer blade
3. Blade magnet
4. Developer screw A
5. Developer screw B
6. Developer case
7. Toner container
8. Toner sensor (TS)

.

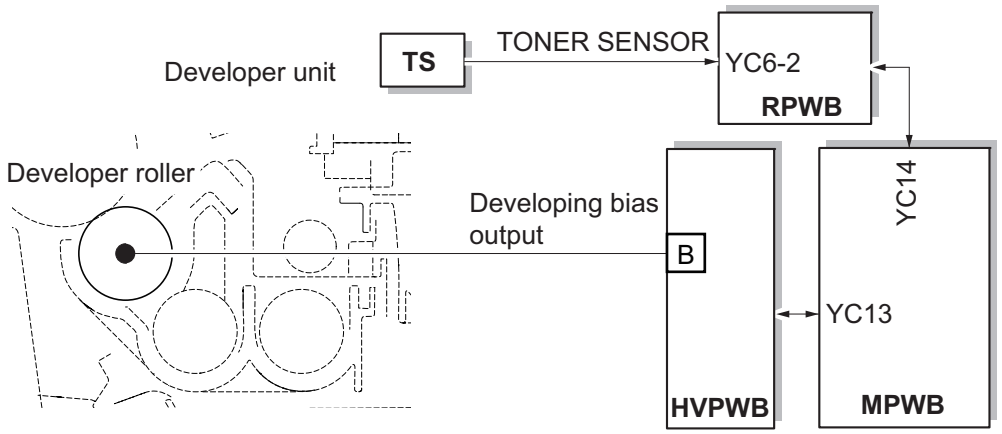

Figure 2-1-7 Developer section block diagram

2-1-4 Optical section

The optical section consists of the laser scanner section for printing.

(1) Laser scanner section

The charged surface of the drum is then scanned by the laser beam from the laser scanner unit. The laser beam is dispersed as the polygon motor (PM) revolves to reflect the laser beam over the drum. Various lenses are housed in the laser scanner unit, adjust the diameter of the laser beam, and focalize it at the drum surface.

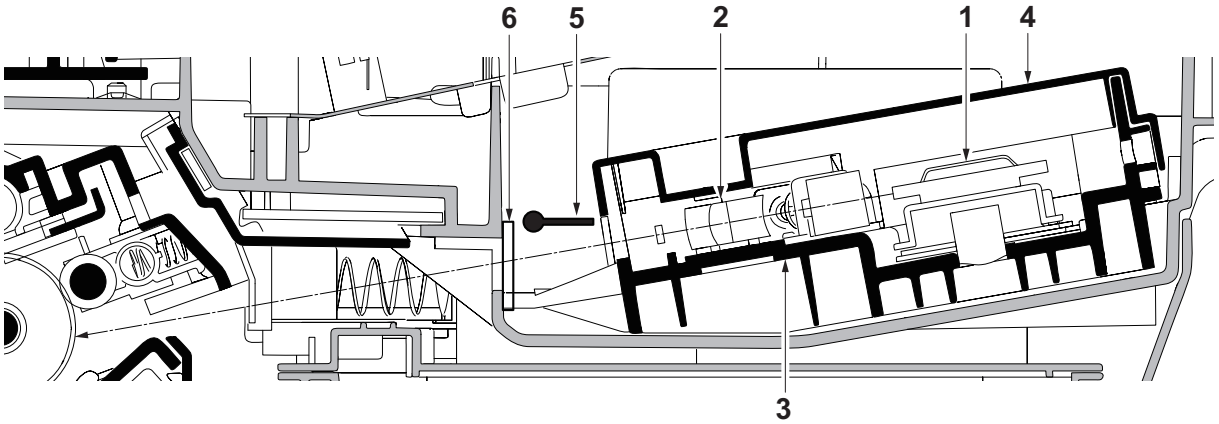

Figure 2-1-8 Laser scanner section

1. Polygon motor (PM)
2. f-θ lens
3. LSU frame
4. LSU cover
5. LSU shutter
6. LSU dust shield glass

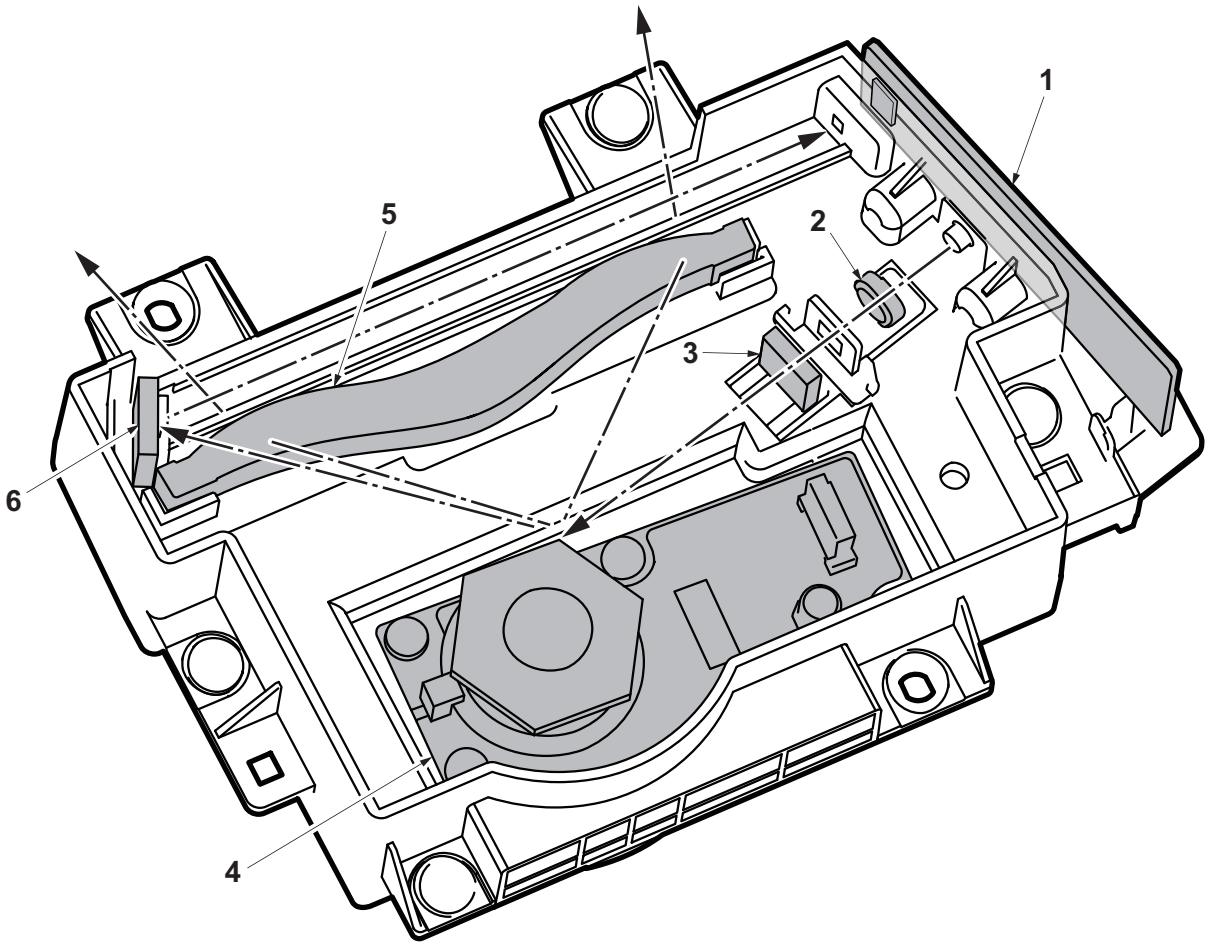

Figure 2-1-9 Laser scanner section

1. APC PWB (APC PWB)
2. Collimator lens
3. Cylindrical lens
4. Polygon motor (PM)
5. f-θ lens
6. Mirror

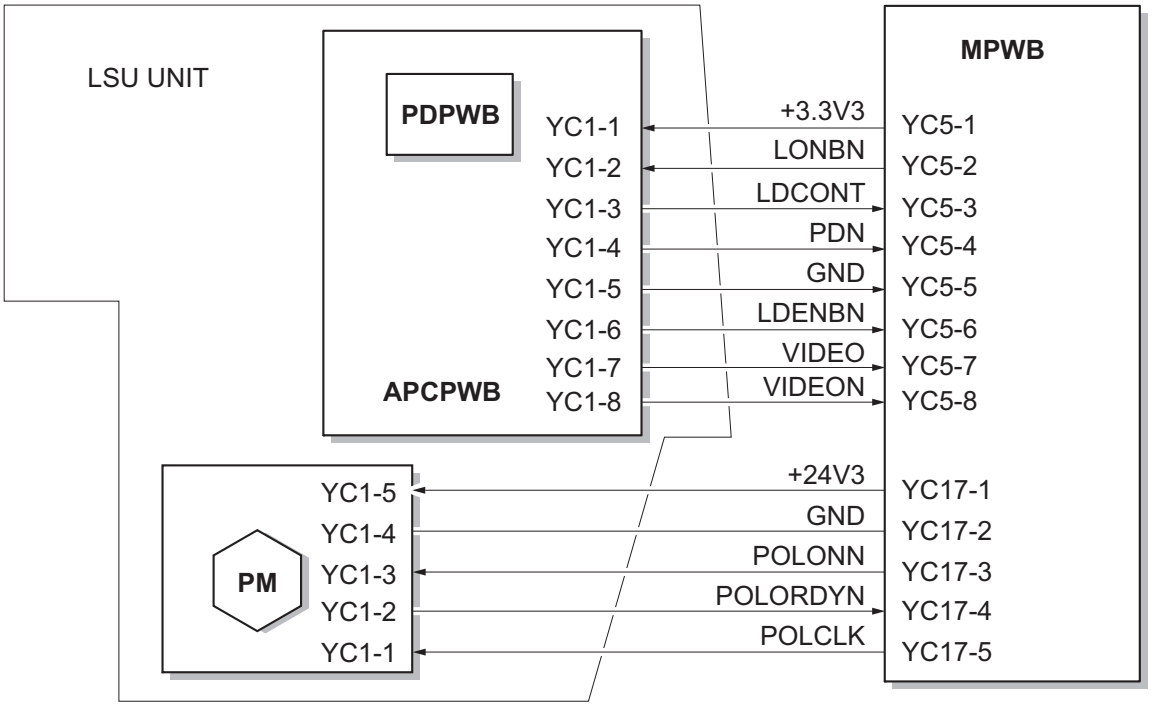

Figure 2-1-10 Laser scanner unit block diagram

2-1-5 Transfer/Separation section

The transfer/separation section consists of the transfer roller, discharger brush. A high voltage generated by the high voltage PWB(HVPWB) is applied to the transfer roller for transfer charging. Paper after transfer is separated from the drum.

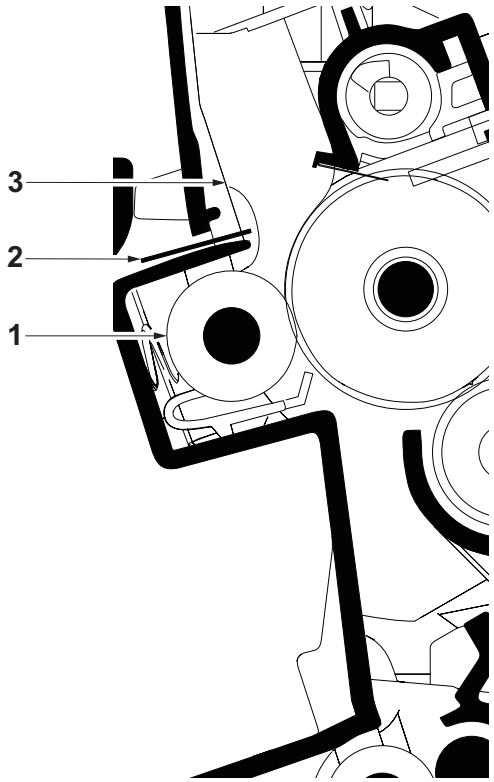

Figure 2-1-11 Secondary transfer roller section

1. Transfer roller
2. Discharger brush
3. Rear transfer guide

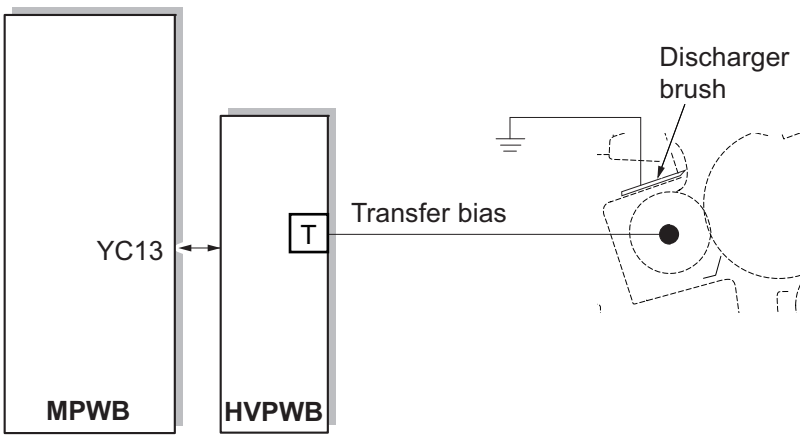

Figure 2-1-12 Transfer roller section block diagram

2-1-6 Fuser section

The paper sent from the transfer/separation section is interleaved between the heat roller and the press roller. The heat roller is heated by the fuser heater (FH), and the toner is fused by heat and pressure and fixed onto the paper because the press roller is pressed by the fuser press spring. The surface temperature of heat roller and press roller are detected by the fuser thermistor (FTH) and controlled by the main PWB (MPWB).

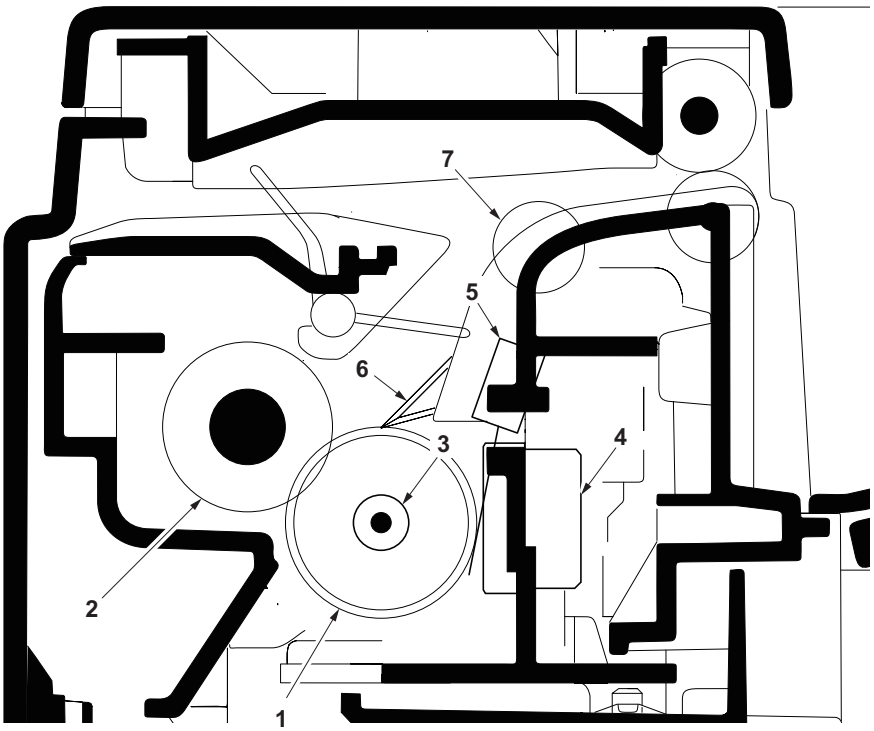

Figure 2-1-13 Fuser section

1. Heat roller
2. Press roller
3. Fuser heater (FH)
4. Fuser thermostat (FTS)
5. Fuser thermistor (FTH)
6. Separators
7. Fuser pulley

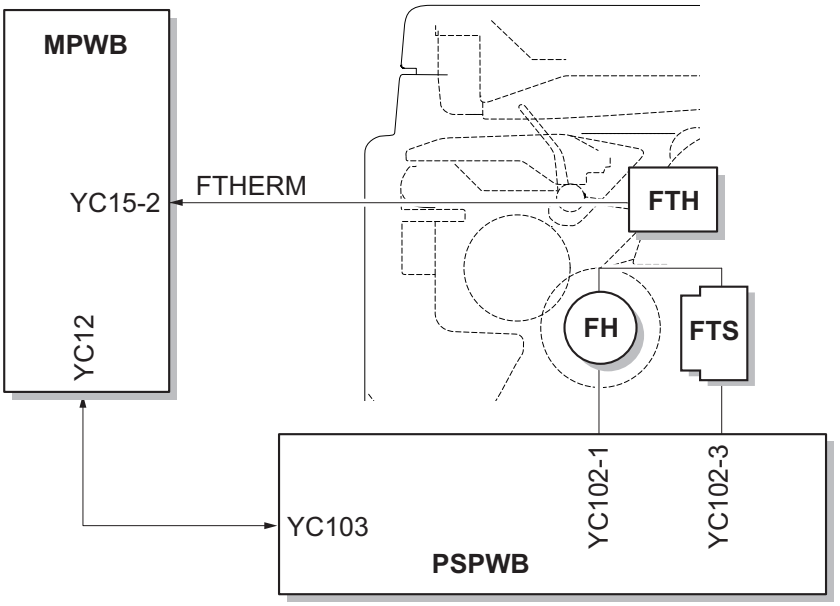

Figure 2-1-14 Fuser section block diagram

2-1-7 Duplex conveying/Eject section

The paper exit section transports the paper which passed the fuser unit towards the top tray.
The paper which passed through the fuser unit, and is delivered to the top tray by the rotation of the eject roller.
The duplex/conveying section consists of conveying path which sends the paper sent from the exit section to the paper feed/conveying section when duplex printing.
.

25/26 ppm model

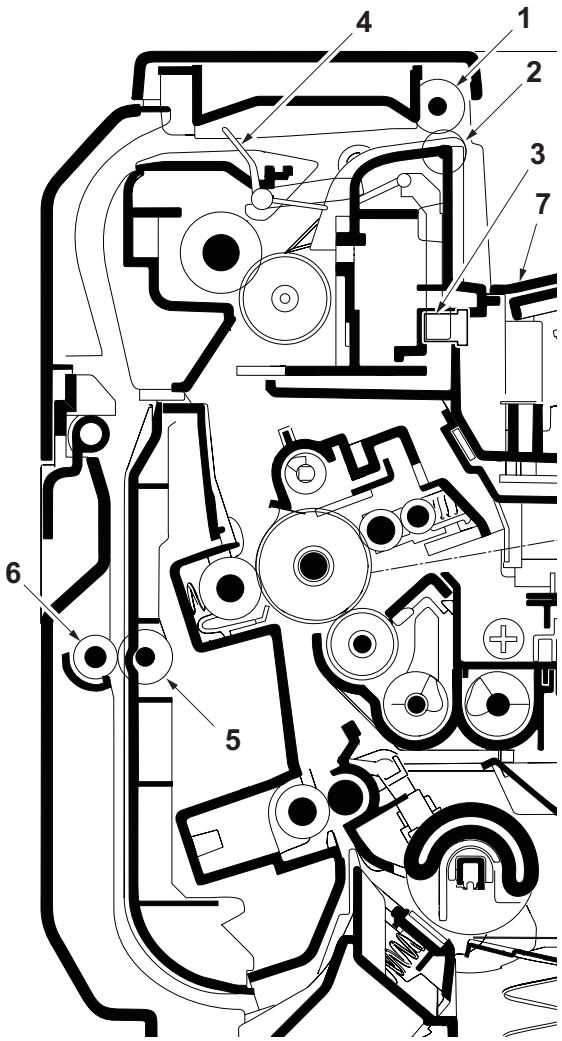

20/21 ppm model

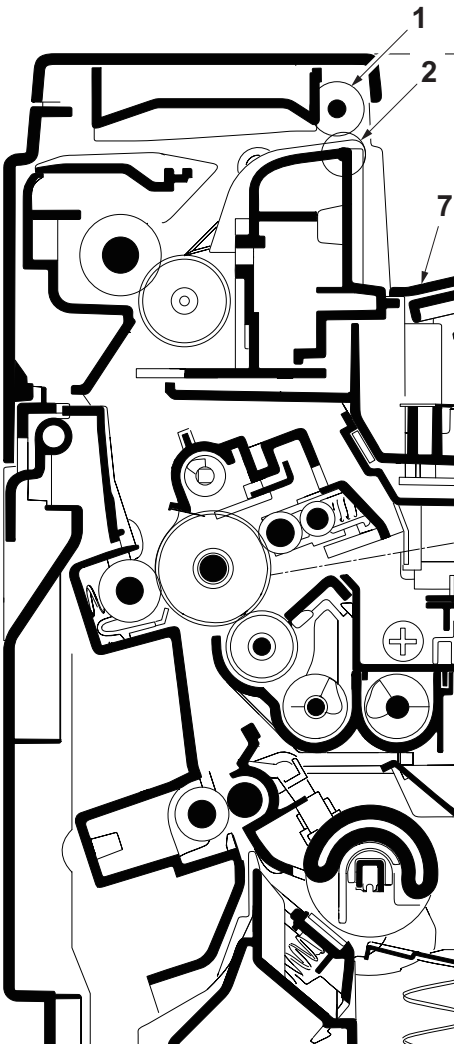

Figure 2-1-15 Duplex conveying section

1. Eject roller
2. Eject pulley
3. Duplex sensor
4. Actuator (duplex sensor)
5. Duplex roller
6. Duplex pulleys
7. Top tray

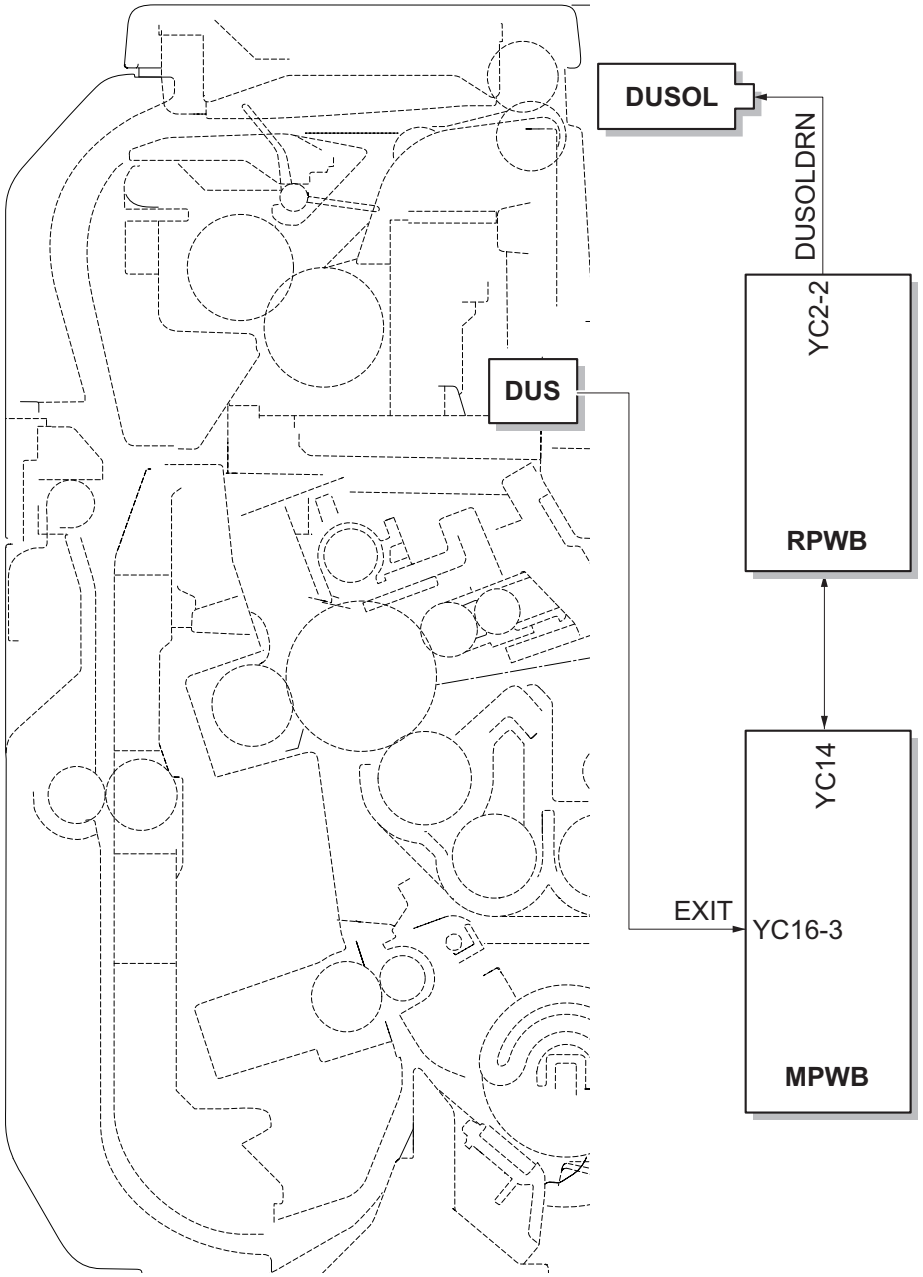

Figure 2-1-16 Duplex conveying section block diagram

This page is intentionally left blank.

2-2-1 Electrical parts layout

(1) PWBs

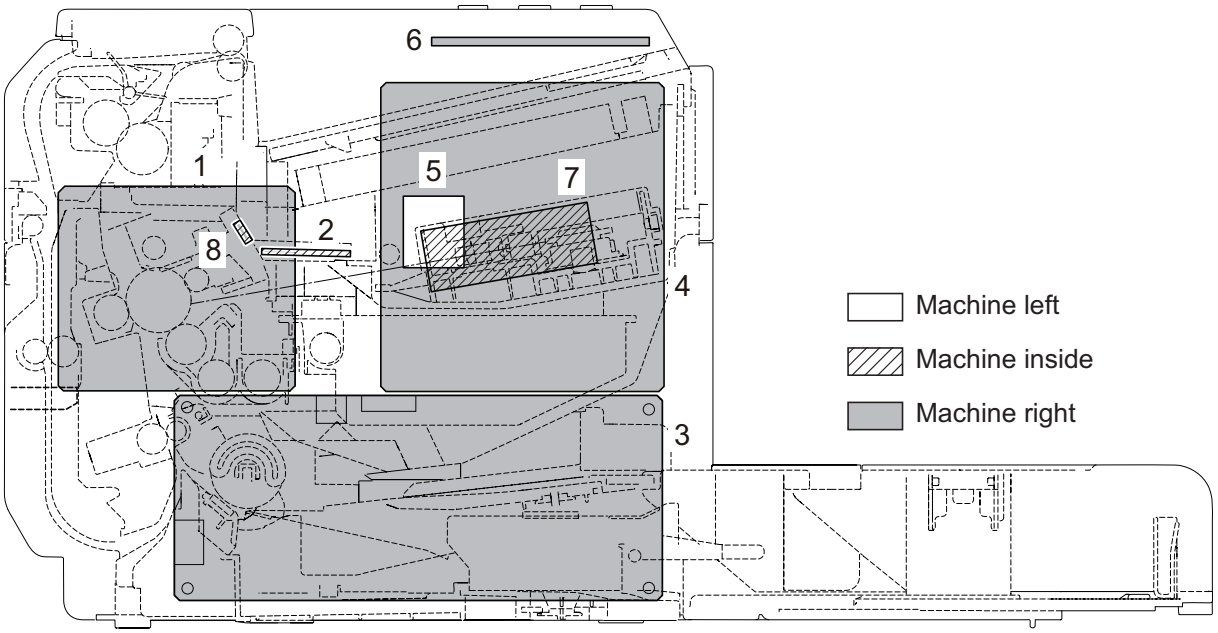

Figure 2-2-1 PWBs

1. Main PWB (MPWB) ..... Main controller: Controls the software such as the print data processing and provides the interface with computers.
   Engine: Controls printer hardware such as high voltage/bias output control, paper conveying system control, and fuser temperature control, etc.
2. Relay PWB (RPWB) ..... Consists of wiring relay circuit between main PWB and Main motor, toner sensor, container sensor, registration sensor, paper feed solenoid, duplex solenoid.
3. Power source PWB (PSPWB) ..... After full-wave rectification of AC power source input, switching for converting to 24 V DC for output.
4. High voltage PWB (HVPWB) ..... Generates main charging, developer bias and transfer bias.
5. Container PWB (CPWB) ..... Reads the container information.
6. Operation panel PWB(OPWB)..... Consists the LED indicators and key switches.
7. APC PWB (APCPWB) ..... Generates and controls the laser beam.
8. Eraser lamp PWB (ELPWB) ..... Eliminates the residual electrostatic charge on the drum.

List of correspondences of PWB names

No.	Name used in service manual	Name used in parts list
1	Main PWB (MPWB) :20 ppm model	PARTS PWB ASSY MAIN SP 20ppm
	Main PWB (MPWB) :25/26 ppm model	PARTS PWB ASSY MAIN SP
2	Relay PWB (RPWB)	-
3	Power source PWB (PSPWB):120V model	PARTS SWITCHING REGULATOR 120V SP
	Power source PWB (PSPWB):220-240V model	PARTS SWITCHING REGULATOR 230V SP
4	High voltage PWB (HVPWB)	PARTS HIGH VOLTAGE UNIT SP
5	Container PWB (CPWB)	PARTS PWB ASSY CONTAINER CONNECT SP
6	Operation PWB(OPWB)	PARTS PWB ASSY PANEL SP
7	APC PWB (APCPWB)	-
8	Eraser lamp PWB (ELPWB)	PARTS PWB ASSY ERASER SP

(2) Switches and sensors

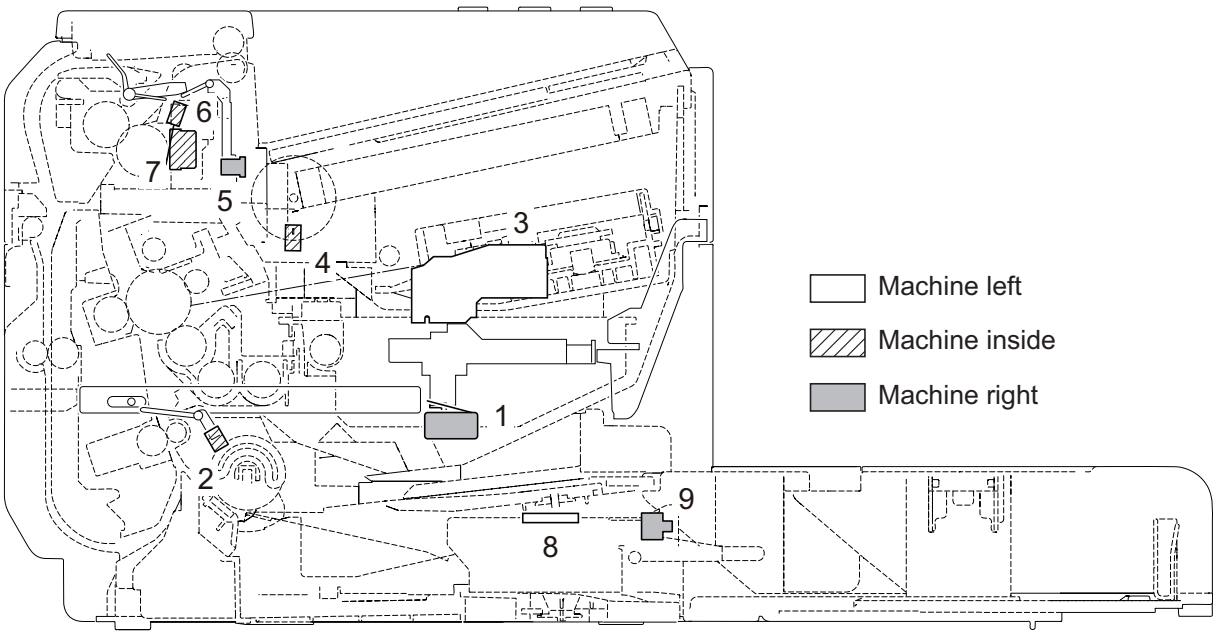

Figure 2-2-2 Switches and sensors

1. Cover switch (CSW)..... Shuts off 24 V DC power line when the front cover and rear cover is opened.
2. Registration sensor (RS)..... Detects the timing of paper conveying.
3. Toner sensor (TS) ..... Detects the quantity of toner in a toner container.
4. Motor count sensor (MCS)..... Detects revolution pulses of the motor.
5. Duplex sensor (DUS)*..... Detects a paper misfeed in the duplex section.
6. Fuser thermistor (FTH) ..... Measures the heat roller temperature.
7. Fuser thermostat (FTS)..... Shuts off the power source to the fuser heater lamp when the heat roller reaches extremely high temperature.
8. Outer temperature sensor (OTEMS)..... Detects the outside temperature.
9. Power switch (PSW) ..... Turns ON/OFF the AC power source.

*: 25/26 ppm model only.

(3) Others

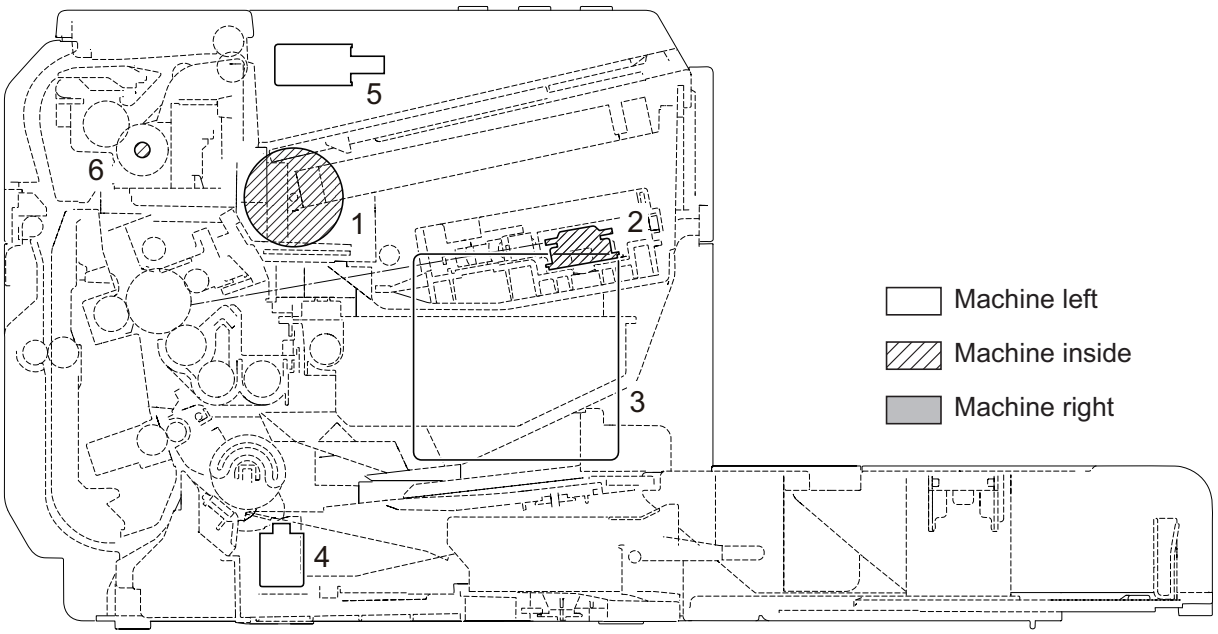

Figure 2-2-3 Others

1. Main motor (MM)..... Drives the paper feed/conveying section and fuser unit.
2. Polygon motor (PM)..... Drives the polygon mirror.
3. Cooling fan motor (FM)..... Cools the interior of machine.
4. Paper feed solenoid (PFSOL)..... Controls the paper cassette paper feed.
5. Duplex solenoid (DUSOL)* ..... Controls the paper conveying at the duplex conveying section.
6. Fuser heater lamp (FH)..... Heats the heat roller.

*: 25/26 ppm model only.

2-3-1 Main PWB

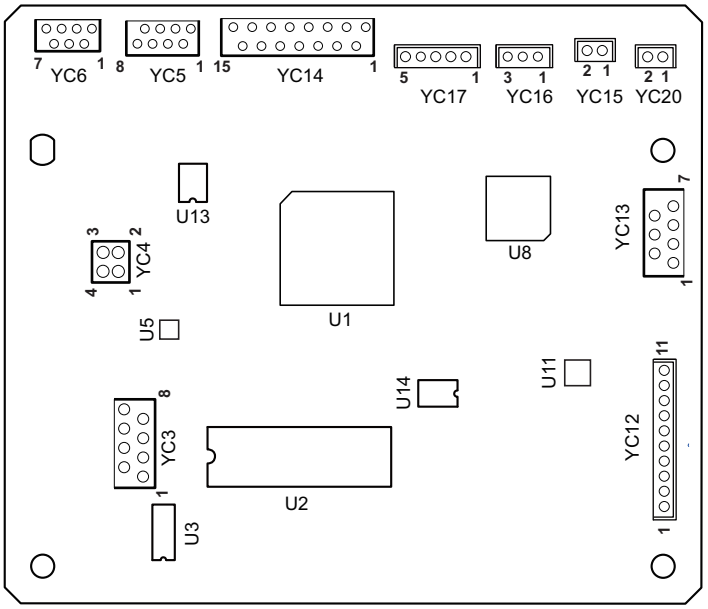

Figure 2-3-1 Main PWB silk-screen diagram

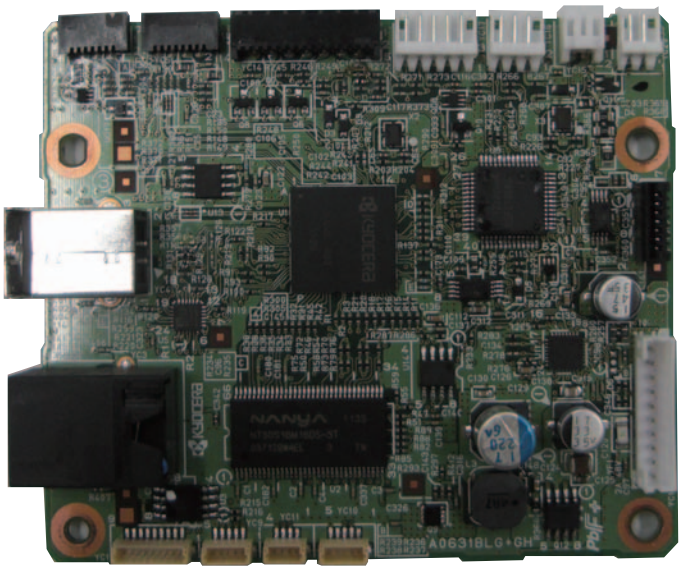

Figure 2-3-2 Main PWB

Connector	Pin	Signal	I/O	Voltage	Description
YC5	1	+3.3V3	O	3.3 V DC	3.3 V DC power to APCPWB
Connected to APC PWB	2	LONBN	O	0/3.3 V DC	Sample/hold signal
	3	LDCONT	O	0/3.3 V DC	LD voltage control signal
	4	PDN	I	0/3.3 V DC (pulse)	Horizontal synchronizing signal
	5	GND	-	-	Ground
	6	LDENBN	O	0/3.3 V DC	Laser output enable signal
	7	VIDEO	O	0/3.3 V DC (pulse)	Video data signal (-)
	8	VIDEON	O	0/3.3 V DC (pulse)	Video data signal (+)
YC6	1	KEY1	I	0/3.3 V DC	KEY1: On/Off
Connected to Operation panel PWB	2	KEY2	I	0/3.3 V DC	KEY2: On/Off
	3	KEY3	I	0/3.3 V DC	KEY3: On/Off
	4	LED1	O	0/3.3 V DC	LED1: On/Off
	5	LED2	O	0/3.3 V DC	LED2: On/Off
	6	LED3	O	0/3.3 V DC	LED3: On/Off
	7	GND	-	-	Ground
YC12	1	GND	-	-	Ground
Connected to Power source PWB	2	GND	-	-	Ground
	3	+24V1	I	24V DC	24 V DC power from PSPWB
	4	PUSHSW	I	0/3.3 V DC	power SW signal
	5	HEATREM	O	0/3.3 V DC	Heater On/Off signal
	6	RELAY	O	DC0V/24V	Relay signal
	7	PSSLEEPN	O	DC0V/24V	Sleep mode signal
	8	ZCROSS	O	0/3.3 V DC (pulse)	Zero-cross signal
	9	+24V2	I	24V DC	24 V DC power from PSPWB
	10	+24V2	I	24V DC	24 V DC power from PSPWB
YC13	1	GND	-	-	Ground
Connected to high voltage PWB	2	MISENS	I	0/3.3 V DC	Charge current signal
	3	TCNT	O	PWM	Transfer current signal
	4	MCNT	O	PWM	Main charger output control signal
	5	RTHVDR	O	0/3.3 V DC	Transfer (reverse) bias output signal
	6	HVCLK	O	0/3.3 V DC (pulse)	Developer bias clock signal
	7	+24V3	O	24V DC	24 V DC power to PSPWB

Connector	Pin	Signal	I/O	Voltage	Description
YC14	1	THERM	I	Analog	TH detection signal
Connected to relay PWB	2	GND	-	-	Ground
	3	SECDATA	I	0/3.3 V DC	CS data signal
	4	SECCLK	O	0/3.3 V DC (pulse)	CS clock signal
	5	+3.3V3	O	3.3 V DC	3.3 V DC power to RPWB
	6	TONERSENS	I	0/3.3 V DC	Toner presence signal
	7	REGIST	I	0/3.3 V DC	RS: On/Off
	8	PULSE	I	0/3.3 V DC (pulse)	Encorder plus signal
	9	GND	-	-	Ground
	10	MOTCLK	O	0/24 V DC (pulse)	MM clock signal
	11	FANDRN	O	DC0V/24V	FM: On/Off
	12	FEEDSOLDRN	O	DC0V/24V	PFSOL: On/Off
	13	DUSOLDRN	O	DC0V/24V	DUSOL: On/Off
	14	+24V3	O	24V DC	24 V DC power to RPWB
	15	+24V3	O	24V DC	24 V DC power to RPWB
YC15	1	+3.3V3	O	3.3 V DC	3.3 V DC power to FTH
Connected to fuser therm-istor	2	FTHERM	I	Analog	Fuser thermistor detection signal
YC16	1	+3.3VEXIT	O	3.3 V DC	3.3 V DC power to DUS
Connected to duplex sen-sor (25/26 ppm model)	2	GND	-	-	Ground
	3	EXIT	I	0/3.3 V DC	DUS: On/Off
YC17	1	+24V3	O	24V DC	24 V DC power to PM
Connected to polygon motor	2	GND	-	-	Ground
	3	POLONN	O	0/3.3 V DC	PM: On/Off
	4	POLORDYN	I	0/3.3 V DC	Polygon motor ready signal
	5	POLCLK	O	0/3.3 V DC (pulse)	Polygon motor clock signal
YC20	1	+24VERASER	O	24V DC	24 V DC power to CL
Connected to Eraser lamp	2	ERASER	O	0/3.3 V DC	CL: On/Off

2-3-2 Relay PWB PWB

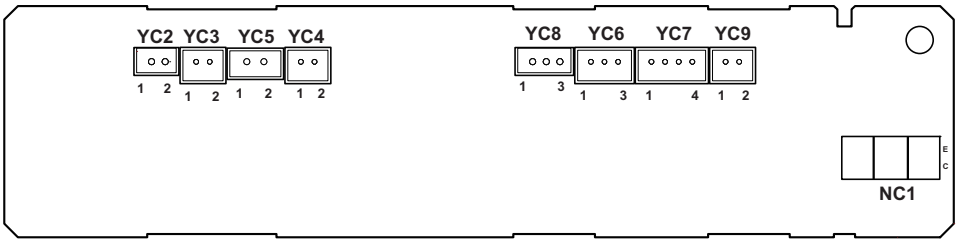

Figure 2-3-3 Relay PWB silk-screen diagram

Figure 2-3-4 Relay PWB

Connector	Pin	Signal	I/O	Voltage	Description
YC2	1	+24V3	O	24V DC	24 V DC power to DUSOL
Connected to duplex solenoid (25/26 ppm model)	2	DUSOLDRN	O	DC0V/24V	DUSOL: On/Off
YC3	1	+24V3	O	24V DC	24 V DC power to PFSOL
Connected to paper feed sole-noid	2	FFEDSOLDRN	O	DC0V/24V	PFSOL: On/Off
YC4	1	OUTA	O	0/24 V DC (pulse)	MM control signal
Connected to main motor	2	OUTB	O	0/24 V DC (pulse)	MM control signal
YC5	1	+24V3	O	24V DC	24 V DC power to FM
Connected to fan motor	2	FANDRN	O	DC0V/24V	FM: On/Off
YC6	1	+24V3	O	24V DC	24 V DC power to TS
Connected to toner sensor	2	TONER SENSOR	I	DC0V/24V	TS: On/Off
	3	GND	-	-	Ground
YC7	1	3.3V3	O	3.3 V DC	3.3 V DC power to CPWB
Connected to container PWB	2	SECCLK	O	0/3.3 V DC (pulse)	Clock signal
	3	SECDATA	I	0/3.3 V DC	Data signal
	4	GND	-	-	Ground
YC8	1	3.3V3	O	3.3 V DCREG	3.3 V DC power to RS
Connected to registra-tion sensor	2	GND	-	-	Ground
	3	REGIST	I	0/3.3 V DC	RS: On/Off
YC9	1	3.3V3	O	3.3 V DC	3.3 V DC power to TH
Connected to outer tempera-ture sensor	2	THERM	I	Analog	Outer thermistor signal

2-3-3 Power source PWB

I

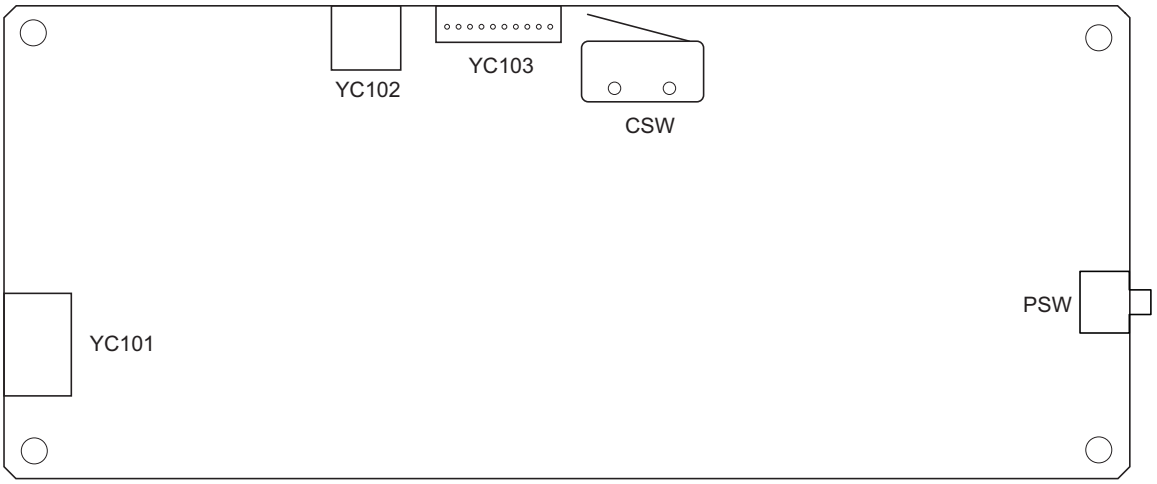

Figure 2-3-5 Power source PWB silk-screen diagram

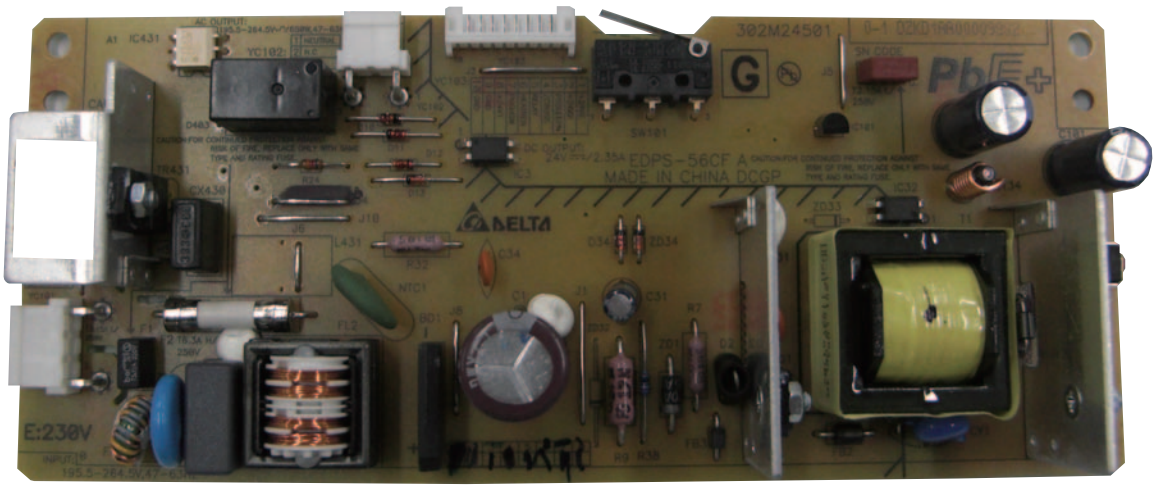

Figure 2-3-6

Connector	Pin	Signal	I/O	Voltage	Description
YC101	1	LIVE	I	120 V AC 220-240 V AC	AC power input
Connected to AC inlet	2	NEUTRAL	I	120 V AC 220-240 V AC	AC power input
YC102	1	HEATER_COM	O	120 V AC 220-240 V AC	AC power output
Connected to Fuser heater lamp	2	NC	-	-	Not used
	3	HEATER_LIVE	O	120 V AC 220-240 V AC	AC power output
YC103	1	+24V2	O	24V DC	24 V DC power to MPWB
Connected to main PWB	2	+24V2	O	24V DC	24 V DC power to MPWB
	3	PSSLEEPN	I	0/3.3 V DC	Sleep mode signal
	4	ZCROSS	O	0/3.3 V DC (pulse)	Zero-cross signal
	5	RELAY	I	0/3.3 V DC	Relay signal
	6	HEATREM	I	0/3.3 V DC	FH: On/Off
	7	PUSHSW	O	0/3.3 V DC	PSW: On/Off
	8	+24V1	O	24V DC	24 V DC power to MPWB
	9	GND	-	-	Ground
	10	GND	-	-	Ground

2-3-4 Operation panel PWB

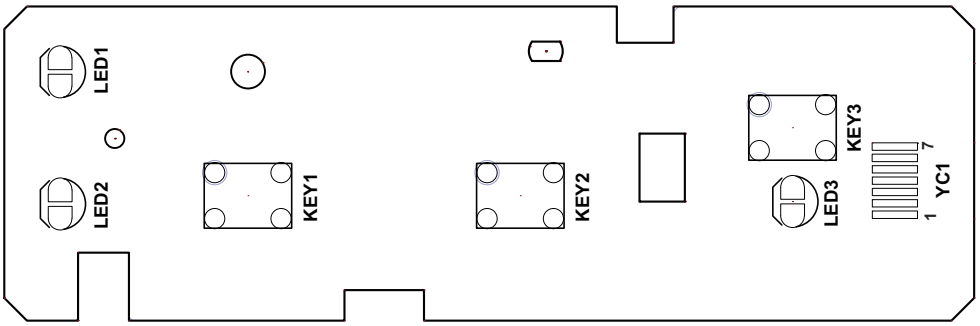

Figure 2-3-7 Operation panel PWB silk-screen diagram

Figure 2-3-8 Operation panel PWB

Connector	Pin	Signal	I/O	Voltage	Description
YC1	1	KEY1	O	0/3.3 V DC	KEY1: On/Off
Connected to main PWB	2	KEY2	O	0/3.3 V DC	KEY2: On/Off
	3	KEY3	O	0/3.3 V DC	KEY3: On/Off
	4	LED1	I	0/3.3 V DC	LED1: On/Off
	5	LED2	I	0/3.3 V DC	LED2: On/Off
	6	LED3	I	0/3.3 V DC	LED3: On/Off
	7	GND	-	-	Ground

2-4-1 Maintenance kits

(1) Maintenance kits

Maintenance part name		Parts No.	Alternative part No.
Name used in service	Name used in parts list		
MK-1110/Maintenance kit (100,000 pages)	MK-1110/MAINTENANCE KIT (for metric)	1702M75NX0	072M75NX0
Drum unit	DK-1110	-	-
Developer unit	DV-1110	-	-
Transfer roller	PARTS ROLLER TRANSFER E SP	-	-
Paper feed pulley	PARTS ROLLER FEED ASSY SP		
Lower paper feed guide	PARTS FRAME FEED BOTTOM ASSY SP		
Toner disposal box	WT-1110	-	-
MK-1112/Maintenance kit (100,000 pages)	MK-1112/MAINTENANCE KIT (for inch)	1702M76UX0	072M76UX0
Drum unit	DK-1110	-	-
Developer unit	DV-1110	-	-
Transfer roller	PARTS ROLLER TRANSFER U SP	-	-
Paper feed pulley	PARTS ROLLER FEED ASSY SP	-	-
Lower paper feed guide	PARTS FRAME FEED BOTTOM ASSY SP	-	-
Toner disposal box	WT-1110	-	-

* : Use a maintenance kit that fulfills requirements.
Using a wrong maintenance kit will cause image blurring and toner contamination, etc. due to the difference of the length of the transfer roller.

2-4-2 Procedure for replacing Maintenance kit

(1) Preparation

Procedure

1. Turned off and turn power off by pressing the power switch.
   Make sure the Processing indicator and the Attention indicator are turned off.

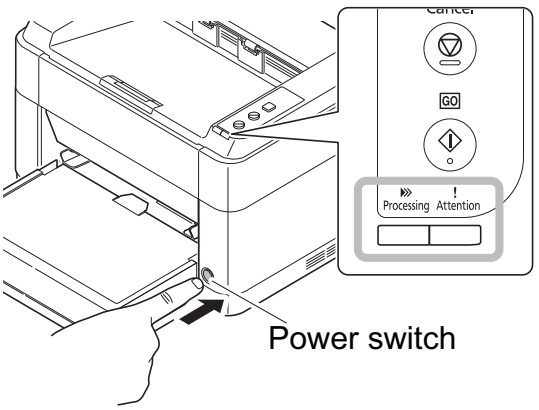

Figure 2-4-1

2. Unplug the power cable from the wall outlet.

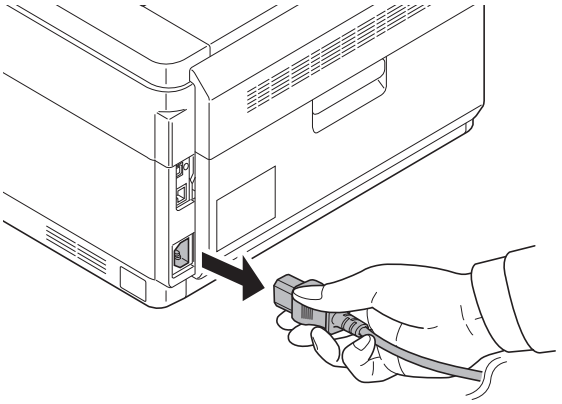

Figure 2-4-2

3. Gently press on both the left and right sides of the cassette cover and pull.

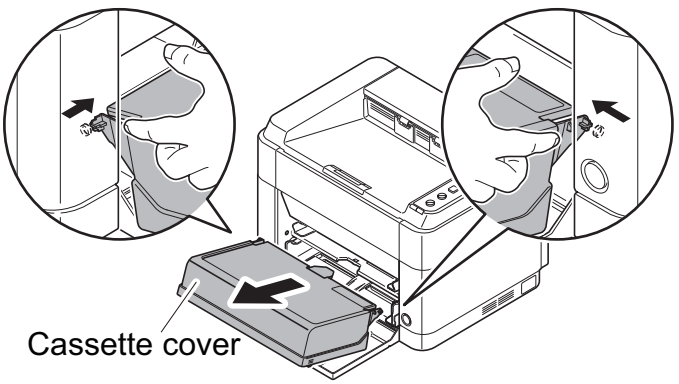

Figure 2-4-3

4. Open the front cover.

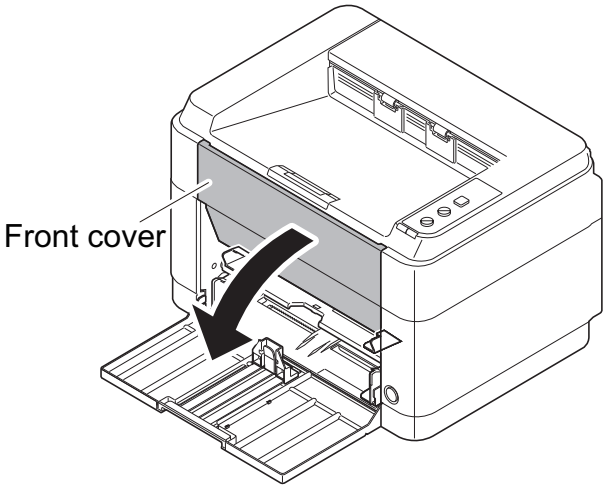

Figure 2-4-4

5. Pull out the toner container.

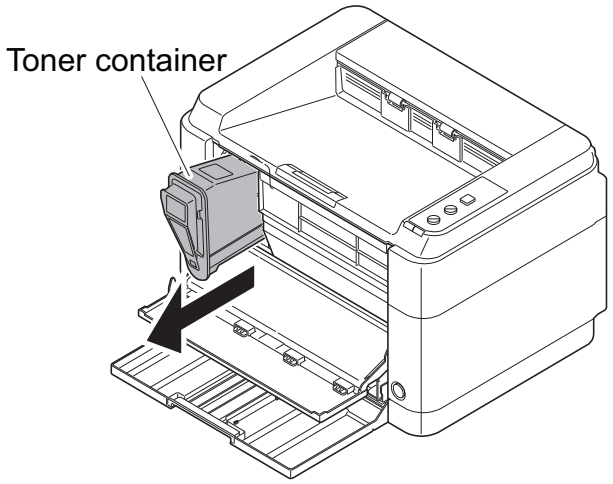

Figure 2-4-5

* : Do not close the front cover.
* : Do not close the front cover while the toner container is not installed, otherwise, the cover-open detecting lever may be damaged.

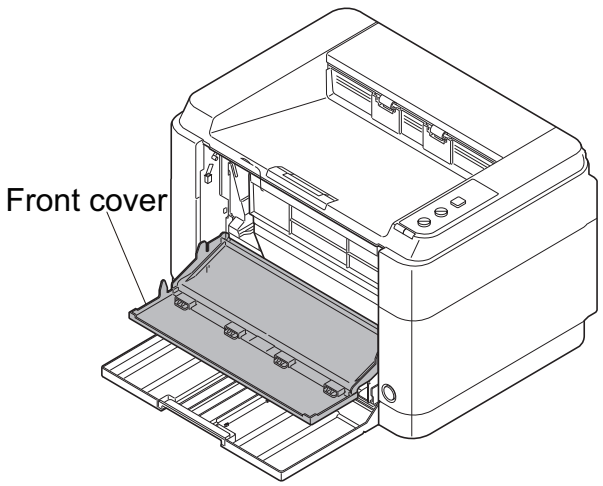

Figure 2-4-6

6. Open the rear cover.

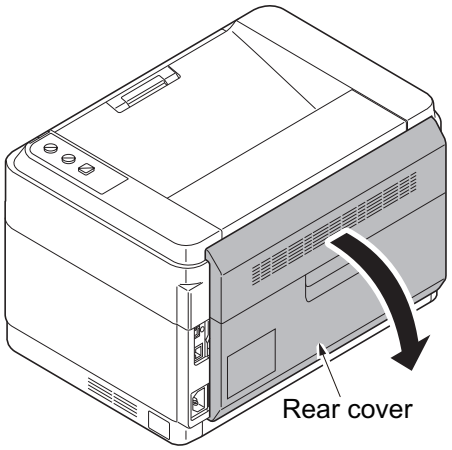

Figure 2-4-7

(2) Detaching the Drum unit

Procedure

1. Remove the drum unit by holding both of its ends.

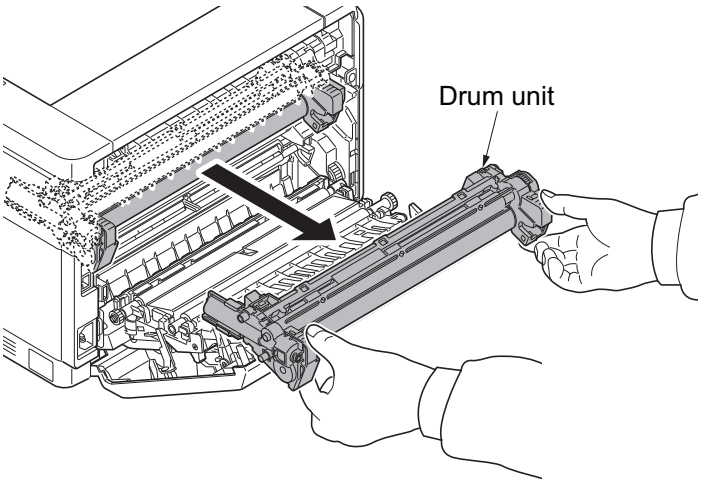

Figure 2-4-8

(3) Detaching the developer unit

Procedure

1. Remove the developer unit by holding both of its ends.

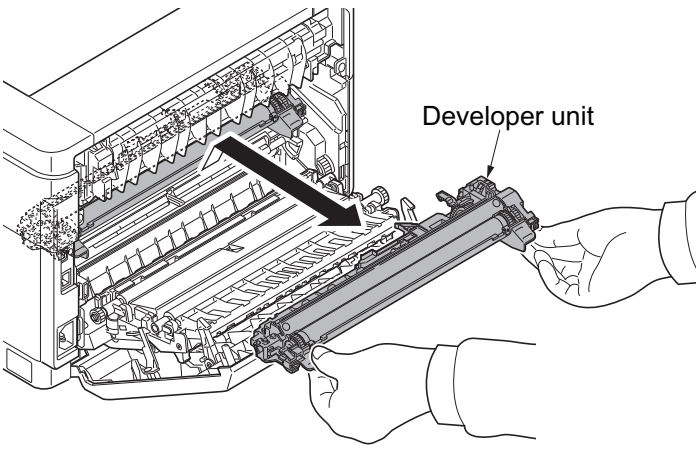

Figure 2-4-9

(4) Detaching the toner disposal box

Procedure

1. Take out the waste toner box by holding it in the middle.

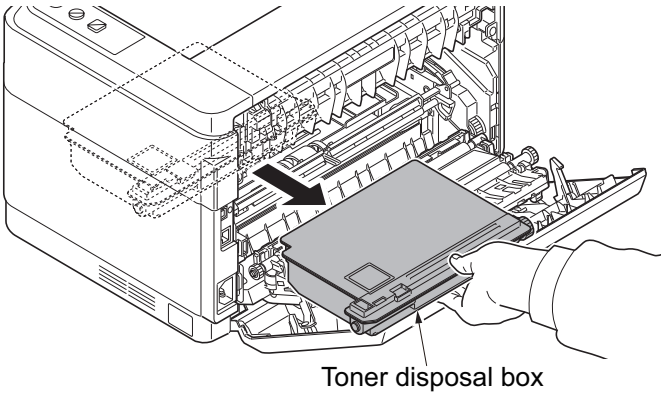

Figure 2-4-10

2. Produce the new waste toner box from the MK kit, remove its sealing cap, and fit the sealing cap to the old waste toner box.

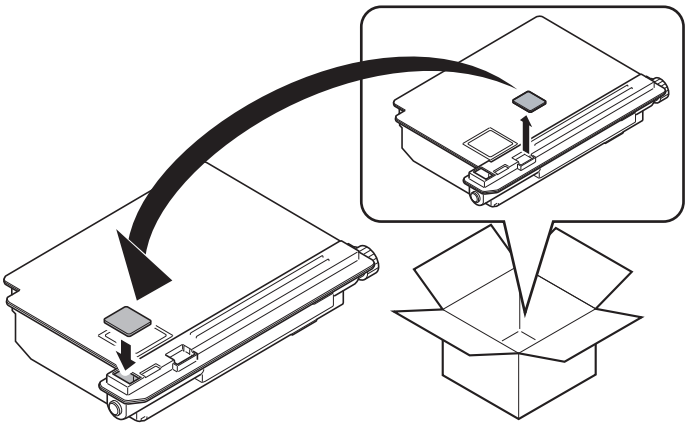

Figure 2-4-11

(5) Detaching and refitting the paper feed pulley and lower paper feed guide

Procedure

1. Close the rear cover.
2. Take out the paper-feed replacement unit from the maintenance kit.
3. Lift the unit and place it on the replacement unit with the front side facing down.

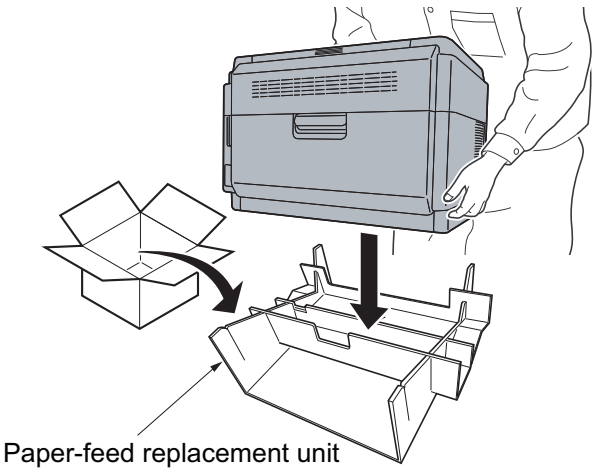

Figure 2-4-12

4. Raise the lever at the lower paper feed guide and slide the lower paper feed guide by holding the rib.

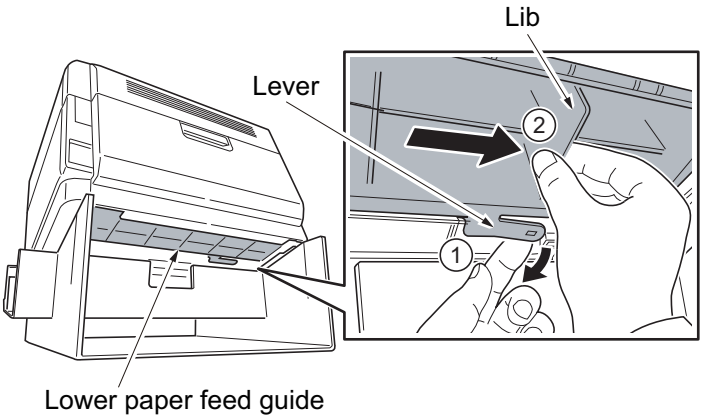

Figure 2-4-13

5. Remove the lower paper feed guide in the reverse direction of its sliding direction and pull askew and upwards.

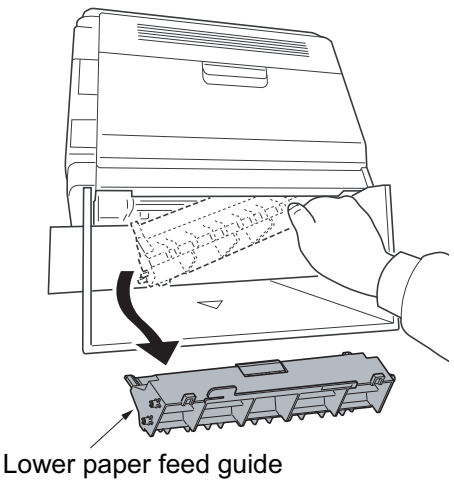

Figure 2-4-14

6. **Detaching the paper feed pulley**
   1.Open the rear cover.
   Note:
   Perform steps while checking the feed roller from the paper feed side.
   2.Raise the left side lever of the roller holder.
   2.Slide the roller holder leftward.
   3.Slide the paper feed pulley.
   4.Pull the feed roller by turning it.

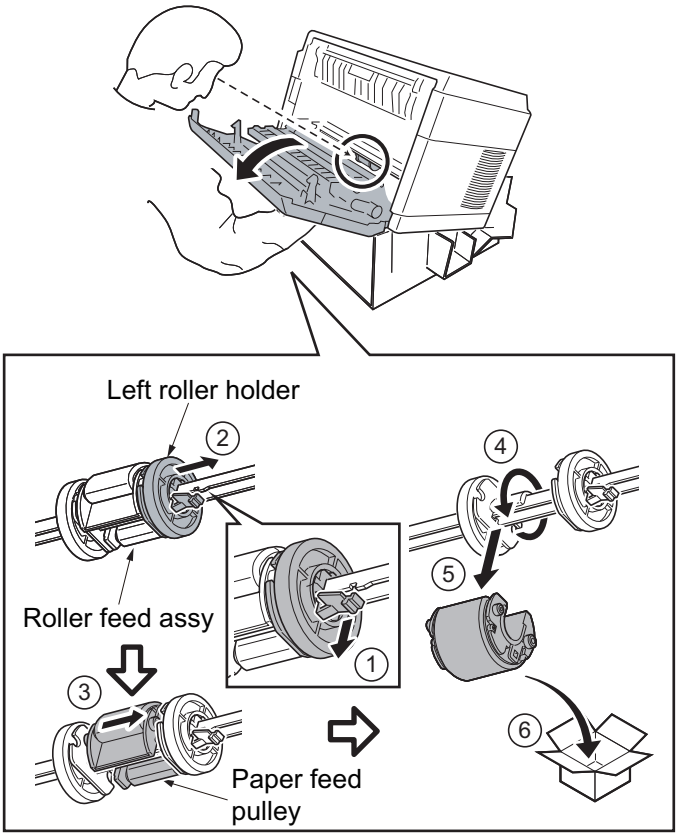

Figure 2-4-15

7. **Refitting the paper feed pulley**
   1.Insert the new paper feed pulley onto the right side axle of the roller holder.
   2.Turn the paper feed pulley.
   3.Turn the paper feed pulley so that its boss and the cutout on the right-side roller holder mate with each other.
   4.Slide the left-side roller holder.
   * : Confirm that it is clicked in and locked.

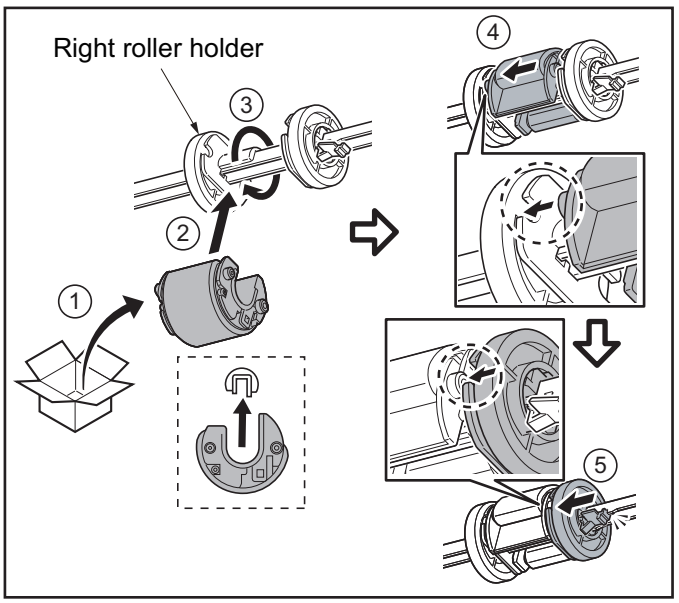

Figure 2-4-16

8. Using the reverse procedure of removing the lower feed guide, insert the right side first, then the left side into the machine. Insert bosses into the holes on the main unit.

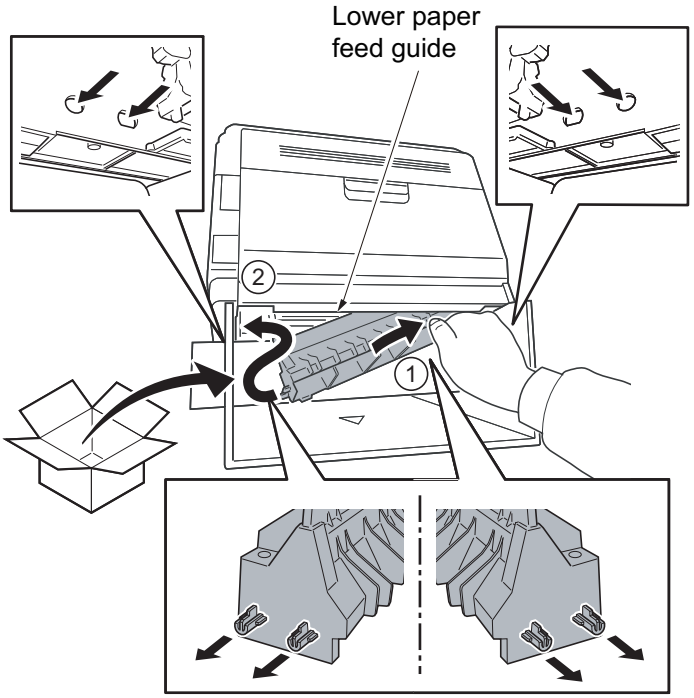

Figure 2-4-17

9. Slide the unit leftwards while holding the rib at the lower paper feed guide.
   * : Make sure the pawls are firmly latched.

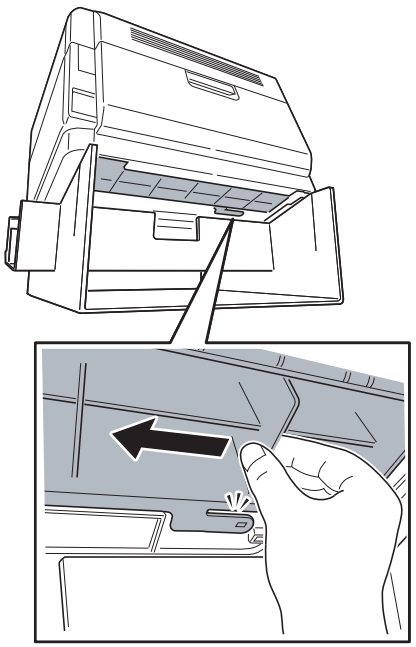

Figure 2-4-18

10. Lift the machine from the replacement unit and move it in the place where it was originally installed.

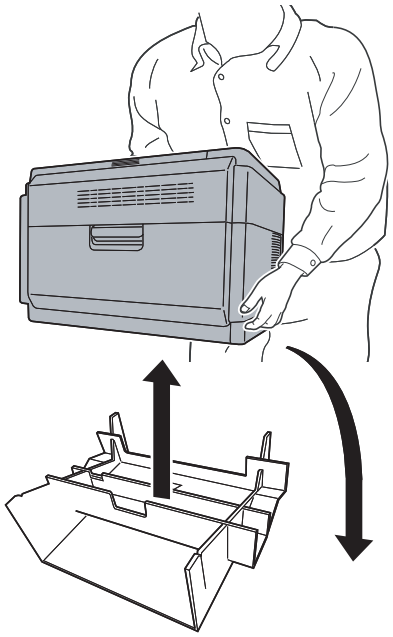

Figure 2-4-19

(6) Refitting the toner disposal box

Procedure

1. Open the rear cover.

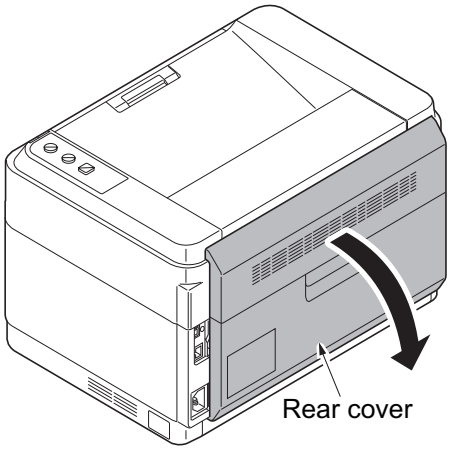

Figure 2-4-20

2. Install the new toner disposal box in the printer.

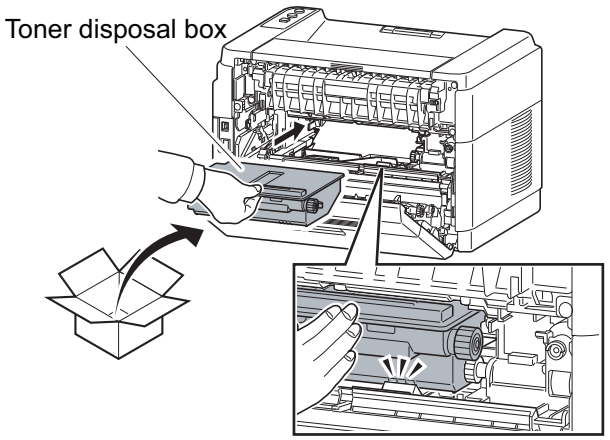

Figure 2-4-21

(7) Refitting the developer unit

Procedure

1. Install the new developer unit in the machine by holding both of its ends. Insert the unit along the guides on both sides.

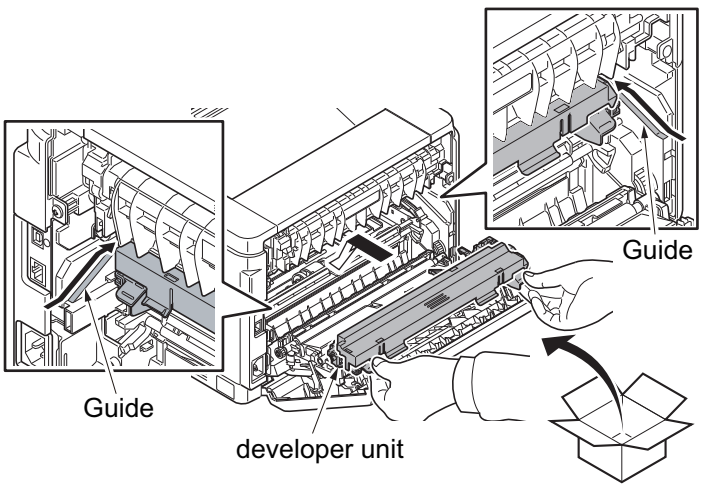

Figure 2-4-22

2. Remove the developer cover by raising the levers on it.

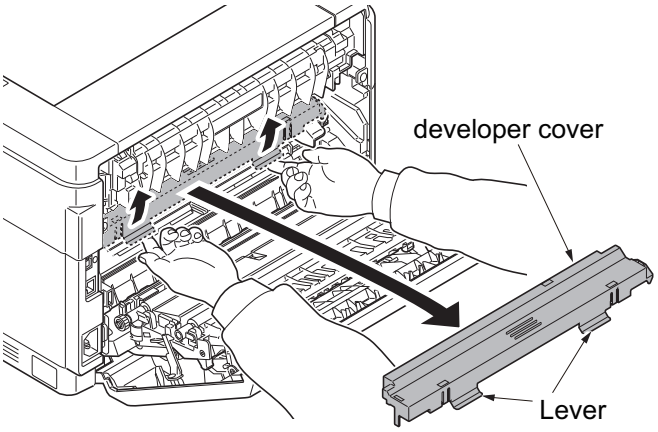

Figure 2-4-23

(8) Refitting the drum unit

Procedure

1. Install the new drum unit in the machine by holding both of its ends.
   Insert the unit along the guides on both sides.

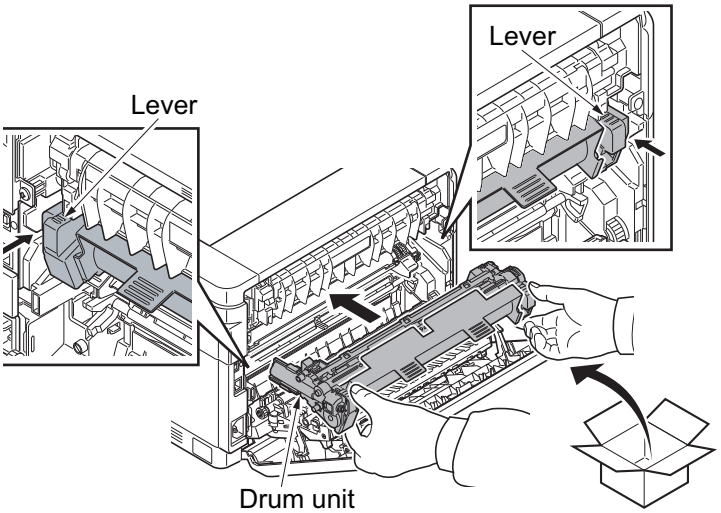

Figure 2-4-24

2. Seat the drum unit in position by pressing the knobs on its ends and remove the drum cover.

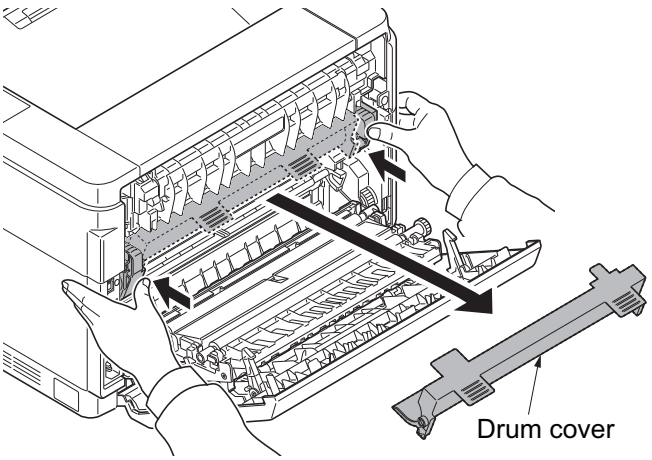

Figure 2-4-25

(9) Detaching and refitting the transfer roller

Procedure

1. Detaching the transfer roller:
   Pull the release lever of the transfer roller at the gear side, unlatch its hook, then lift the transfer roller.

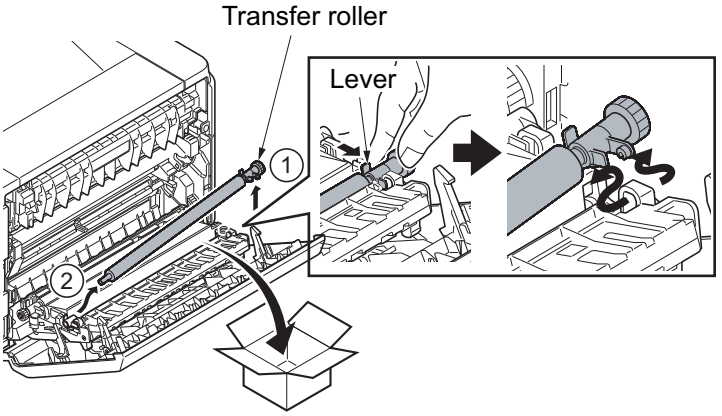

Figure 2-4-26

2. Using the reverse procedure of removing the transfer roller, insert the left side first into the bush,and then attach the other side.Insert the hooks first into the machine,and then push down it to lock.

   * : Push in firmly until you hear a “click” sound.

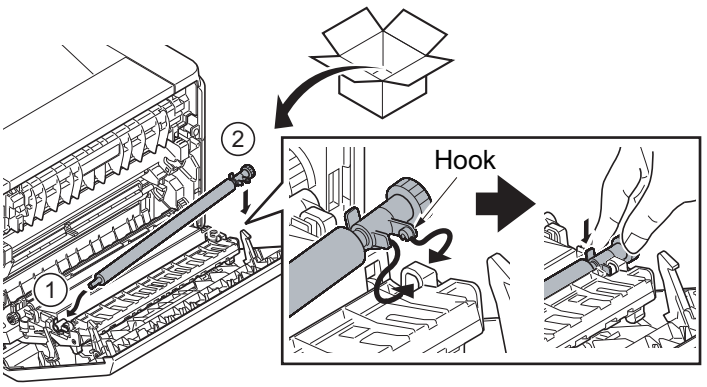

Figure 2-4-27

3. Close the rear cover.

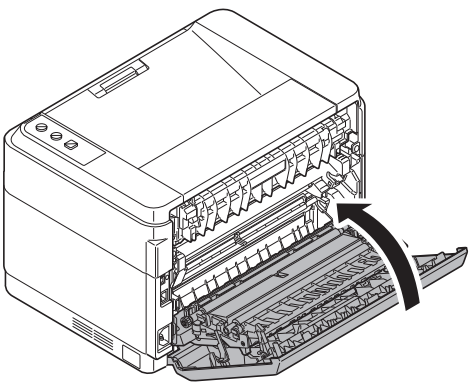

Figure 2-4-28

4. Install the toner container in the printer.
   * : Push in firmly until you hear a “click” sound.

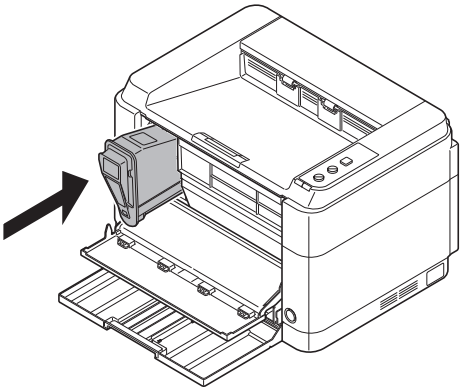

Figure 2-4-29

(10) Notice after replacing maintenance kit

Procedure

1. Insert the power plug and turn the power switch on.
2. Make sure the Processing indicator and the Attention indicator are turned on, press and hold both Cancel and GO for more than 5 seconds.
   * : Perform the above while the front cover is opened.
3. When the Processing indicator has turned on, turn power off by pressing the power switch.
4. Close the front cover.
5. When power is turned on by pressing the power key, settings are activated.
   * : During activation, Processing and Attention are lit up. It will take approximately ten minutes.
   * : Do not turn power off during activation.
6. Activation is finished when Attention is lit.

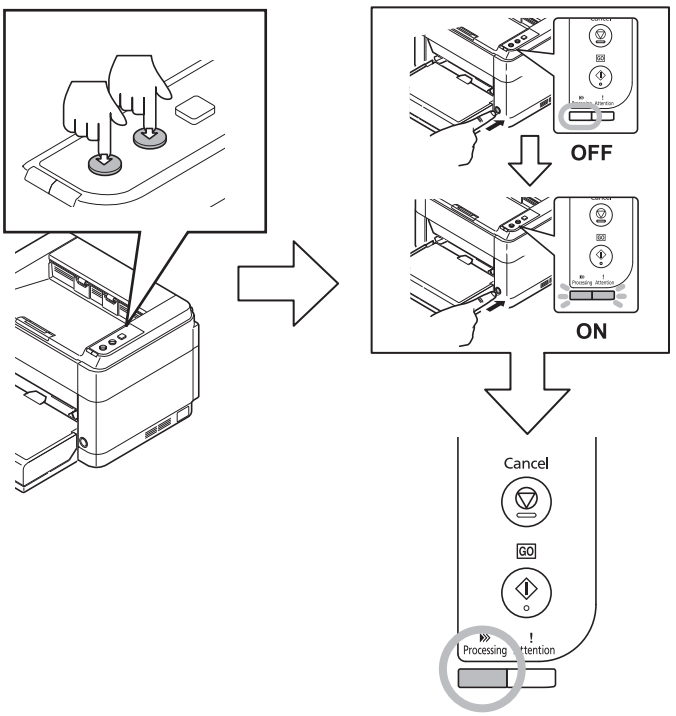

Figure 2-4-30

(11) Procedure for only replacing Drum unit

Procedure

1. Open the rear cover.
2. Remove the drum unit.
   (see page P.2-4-4)
3. Install the new drum unit in the printer.
   (see page P.2-4-11)
4. Close the rear cover.
5. Open the front cover.
6. Insert the power plug and turn the power switch on.
7. Make sure the Processing indicator and the Attention indicator are turned on, press and hold both Cancel and Quiet Mode for more than 5 seconds.
8. Follow the same steps as step 3 and later, Notice after replacing maintenance kit.

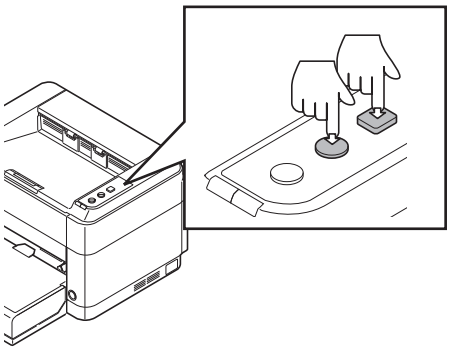

Figure 2-4-31

(12) Procedure for only replacing Developer unit

Procedure

1. Open the front cover.
2. Pull out the toner container.
   * : Do not close the front cover.
3. Open the rear cover.
4. Remove the drum unit.
   (see page P.2-4-4)
5. Remove the developer unit.
   (see page P.2-4-4)
6. Install the new developer unit in the printer.(see page P.2-4-10)
7. Install the toner container in the printer.
   * : Do not close the front cover.
8. Install the drum unit in the printer.
   (see page P.2-4-11)
9. Close the rear cover.
10. Insert the power plug and turn the power switch on.
11. Make sure the Processing indicator and the Attention indicator are turned on, press and hold both GO and Quiet Mode for more than 5 seconds.
12. Follow the same steps as step 3 and later, Notice after replacing maintenance kit.

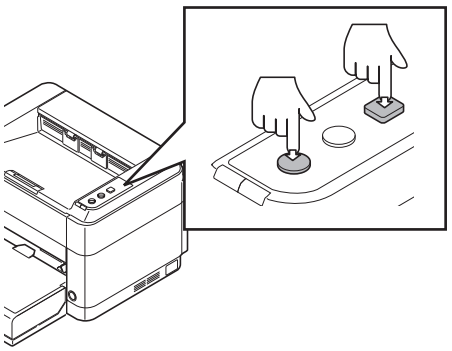

Figure 2-4-32

2-4-3 Cleaning the Printer

To avoid print quality problems, the interior of the printer must be cleaned with every toner container replacement.

1. Open the rear cover.

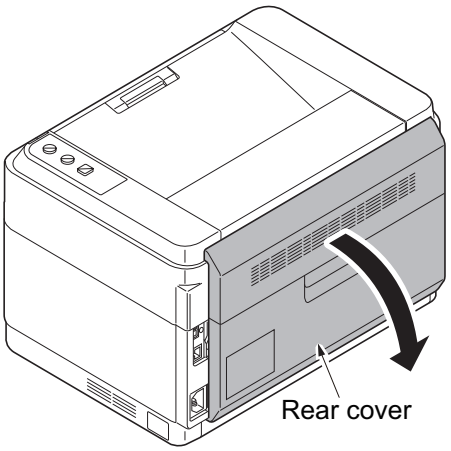

Figure 2-4-33

2. Use a clean, lint-free cloth to wipe dust and dirt off the front and rear registration rollers and conveying unit.
   * : Take care not to touch the drum and transfer roller (black) during cleaning.

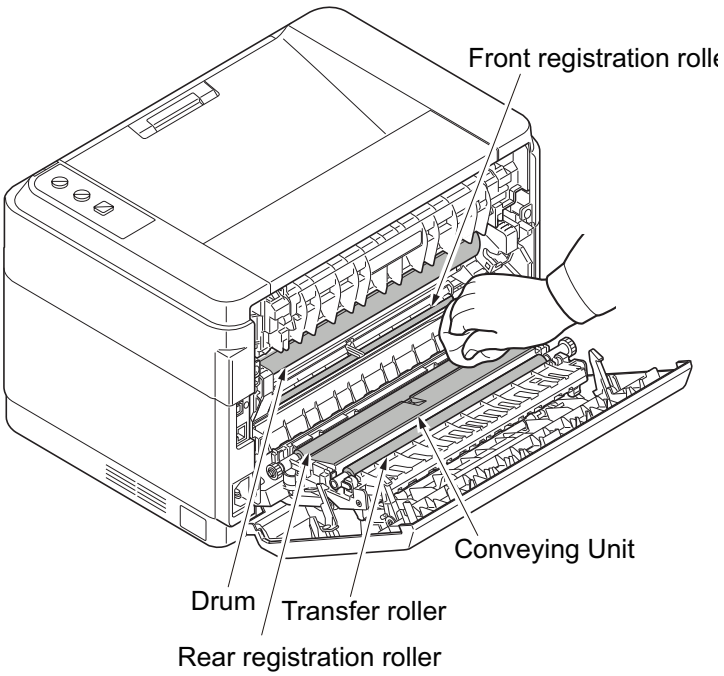

Figure 2-4-34

2-4-4 Appendixes

(1) Repetitive defects gauge

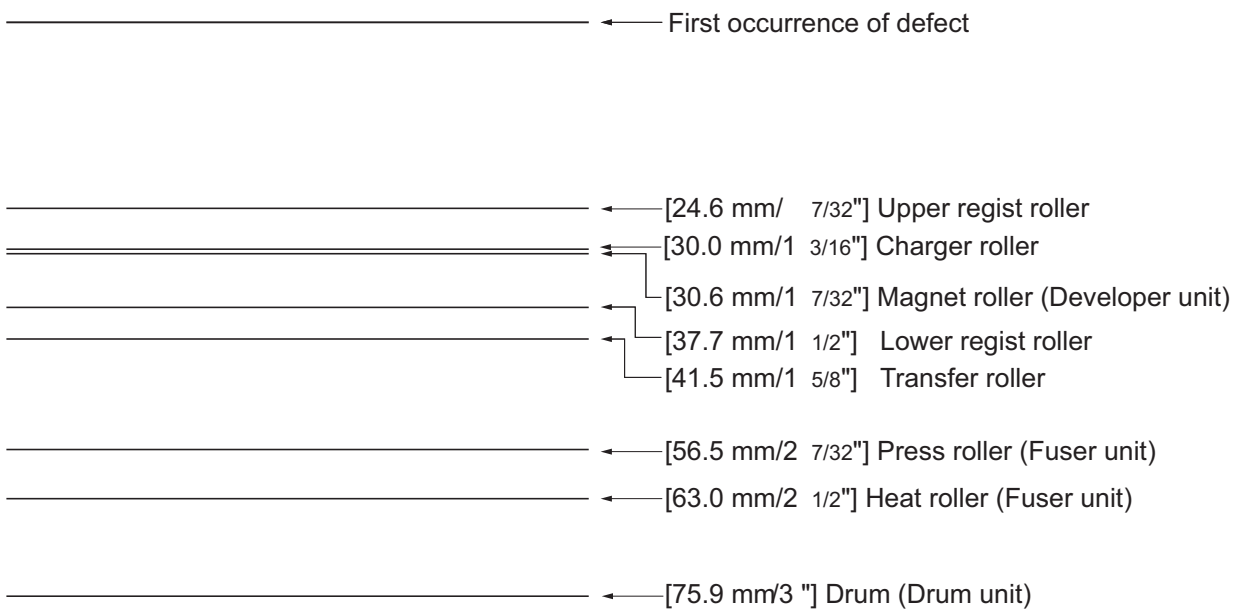

(2) Wiring diagram

No.1

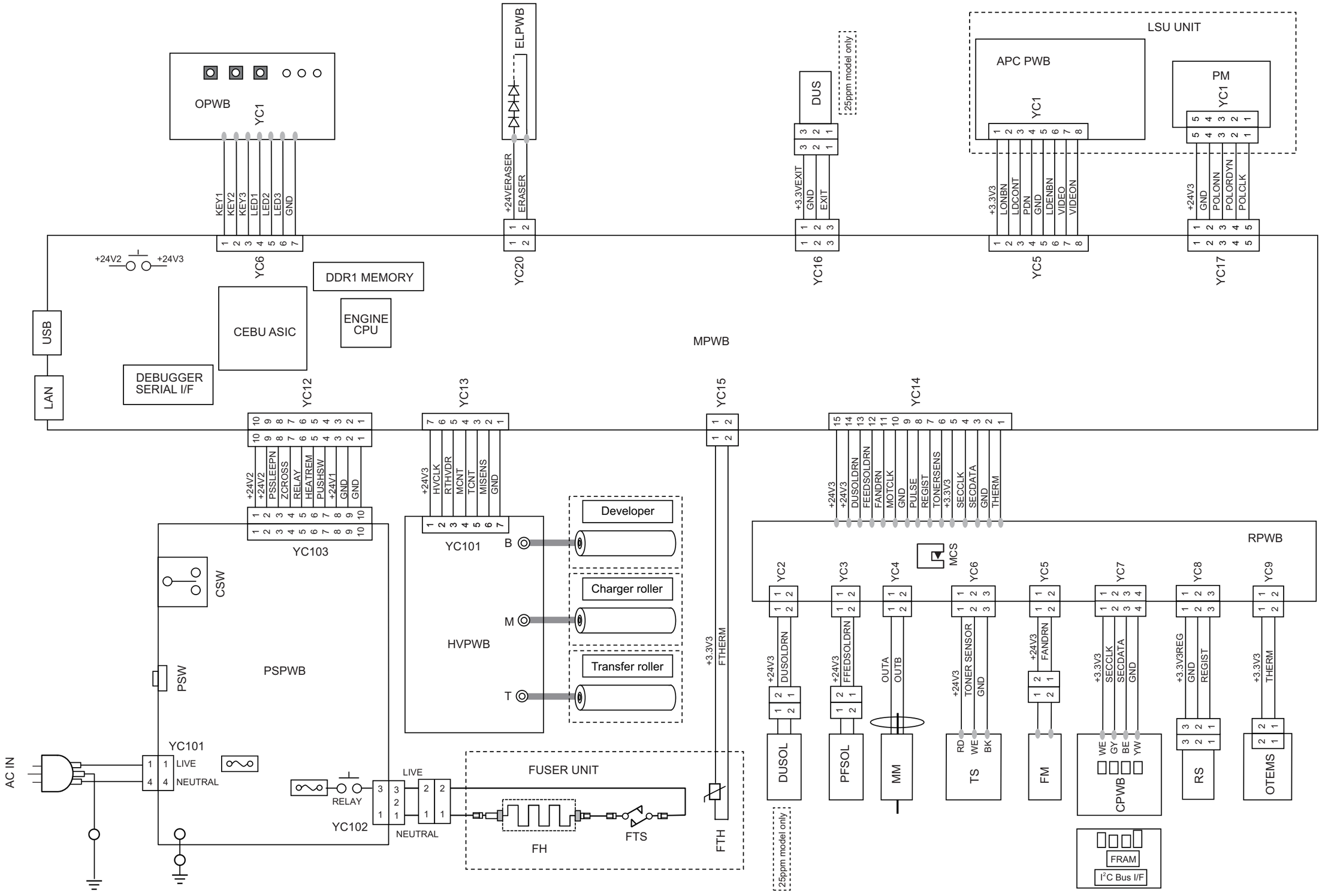

KYOCERA Document Solutions America, Inc.
Headquarters
225 Sand Road,
Fairfield, New Jersey 07004-0008, USA
Phone: +1-973-808-8444
Fax: +1-973-882-6000

Latin America
8240 NW 52nd Terrace Dawson Building, Suite 100
Miami, Florida 33166, USA
Phone: +1-305-421-6640
Fax: +1-305-421-6666

KYOCERA Document Solutions Canada, Ltd.
6120 Kestrel Rd., Mississauga, ON L5T 1S8,
Canada
Phone: +1-905-670-4425
Fax: +1-905-670-8116

KYOCERA Document Solutions Mexico, S.A. de C.V.
Calle Arquimedes No. 130, 4 Piso, Colonia Polanco
Chapultepec, Delegacion Miguel Hidalgo,
Distrito Federal, C.P. 11560, México
Phone: +52-555-383-2741
Fax: +52-555-383-7804

KYOCERA Document Solutions Brazil, Ltd.
Av.Tambore,1180 Mod.B-09 CEP 06460-000
Tambore-Barueri-SP, Brazil
Phone: +55-11-4195-8496
Fax: +55-11-4195-6167

KYOCERA Document Solutions Australia Pty. Ltd.
Level 3, 6-10 Talavera Road North Ryde N.S.W, 2113,
Australia
Phone: +61-2-9888-9999
Fax: +61-2-9888-9588

KYOCERA Document Solutions New Zealand Ltd.
1-3 Parkhead Place, Albany, Auckland 1330, New Zealand
Phone: +64-9-415-4517
Fax: +64-9-415-4597

KYOCERA Document Solutions Asia Limited
16/F.,Mita Centre, 552-566, Castle Peak Road
Tsuenwan, NT, Hong Kong
Phone: +852-2610-2181
Fax: +852-2610-2063

KYOCERA Document Solutions (Thailand) Corp., Ltd.
335 Ratchadapisek Road, Bangsue, Bangkok 10800,
Thailand
Phone: +66-2-586-0333
Fax: +66-2-586-0278

KYOCERA Document Solutions Singapore Pte Ltd.
12 Tai Seng Street #04-01A,
Luxasia Building, Singapore 534118
Phone: +65-6741-8733
Fax: +65-6748-3788

KYOCERA Document Solutions Hong Kong Limited
16/F.,Mita Centre, 552-566, Castle Peak Road
Tsuenwan, NT, Hong Kong
Phone: +852-2429-7422
Fax: +852-2423-2159

KYOCERA Document Solutions Taiwan Corporation
6F., No.37, Sec. 3, Minquan E. Rd.,
Zhongshan Dist., Taipei 104, Taiwan R.O.C.
Phone: +886-2-2507-6709
Fax: +886-2-2507-8432

KYOCERA Document Solutions Korea Co., Ltd.
18F, Kangnam bldg, 1321-1,
Seocho-Dong, Seocho-Gu, Seoul, Korea
Phone: +822-6933-4050
Fax: +822-747-0084

KYOCERA Document Solutions India Private Limited
First Floor, ORCHID CENTRE
Sector-53, Golf Course Road, Gurgaon 122 002, India
Phone: +91-0124-4671000
Fax: +91-0124-4671001

KYOCERA Document Solutions Europe B.V.
Bloemlaan 4, 2132 NP Hoofddorp,
The Netherlands
Phone: +31-20-654-0000
Fax: +31-20-653-1256

KYOCERA Document Solutions Nederland B.V.
Beechavenue 25, 1119 RA Schiphol-Rijk,
The Netherlands
Phone: +31-20-5877200
Fax: +31-20-5877260

KYOCERA Document Solutions (U.K.) Limited
8 Beacontree Plaza,
Gillette Way Reading, Berkshire RG2 0BS,
United Kingdom
Phone: +44-118-931-1500
Fax: +44-118-931-1108

KYOCERA Document Solutions Italia S.p.A.
Via Verdi, 89/91 20063 Cernusco s/N.(MI),
Italy
Phone: +39-02-921791
Fax: +39-02-92179-600

KYOCERA Document Solutions Belgium N.V.
Sint-Martinusweg 199-201 1930 Zaventem,
Belgium
Phone: +32-2-7209270
Fax: +32-2-7208748

KYOCERA Document Solutions France S.A.S.
Espace Technologique de St Aubin
Route de l'Orme 91195 Gif-sur-Yvette CEDEX,
France
Phone: +33-1-69852600
Fax: +33-1-69853409

KYOCERA Document Solutions Espana S.A.
Edificio Kyocera, Avda. de Manacor No.2,
28290 Las Matas (Madrid), Spain
Phone: +34-91-6318392
Fax: +34-91-6318219

KYOCERA Document Solutions Finland Oy
Atomitie 5C, 00370 Helsinki,
Finland
Phone: +358-9-47805200
Fax: +358-9-47805390

KYOCERA Document Solutions Europe B.V., Amsterdam (NL) Zürich Branch
Hohlstrasse 614, 8048 Zürich,
Switzerland
Phone: +41-44-9084949
Fax: +41-44-9084950

KYOCERA Document Solutions Deutschland GmbH
Otto-Hahn-Strasse 12, 40670 Meerbusch,
Germany
Phone: +49-2159-9180
Fax: +49-2159-918100

KYOCERA Document Solutions Austria GmbH
Eduard-Kittenberger-Gasse 95, 1230 Vienna,
Austria
Phone: +43-1-863380
Fax: +43-1-86338-400

KYOCERA Document Solutions Nordic AB
Esbogatan 16B 164 75 Kista, Sweden
Phone: +46-8-546-550-00
Fax: +46-8-546-550-10

KYOCERA Document Solutions Norge NUF
Postboks 150 Oppsal, 0619 Oslo,
Norway
Phone: +47-22-62-73-00
Fax: +47-22-62-72-00

KYOCERA Document Solutions Danmark A/S
Ejby Industrivej 60, DK-2600 Glostrup,
Denmark
Phone: +45-70223880
Fax: +45-45765850

KYOCERA Document Solutions Portugal Lda.
Rua do Centro Cultural, 41 (Alvalade) 1700-106 Lisboa,
Portugal
Phone: +351-21-843-6780
Fax: +351-21-849-3312

KYOCERA Document Solutions South Africa (Pty) Ltd.
49 Kyalami Boulevard,
Kyalami Business Park 1685 Midrand, South Africa
Phone: +27-11-540-2600
Fax: +27-11-466-3050

KYOCERA Document Solutions Russia LLC
Botanichesky pereulok 5, Moscow, 129090,
Russia
Phone: +7(495)741-0004
Fax: +7(495)741-0018

KYOCERA Document Solutions Middle East
Dubai Internet City, Bldg. 17,
Office 157 P.O. Box 500817, Dubai,
United Arab Emirates
Phone: +971-04-433-0412

KYOCERA Document Solutions Inc.
2-28, 1-chome, Tamatsukuri, Chuo-ku
Osaka 540-8585, Japan
Phone: +81-6-6764-3555
http://www.kyoceradocumentsolutions.com

© 2012 KYOCERA Document Solutions Inc.

KYOCERA is a trademark of KYOCERA Corporation